ACD4-MR GM1 / IRIS1 Control System

CHANGES

WARNING
THIS WORK AND THE INFORMATION IT CONTAINS ARE THE PROPERTY OF OTIS ELEVATOR COMPANY ("OTIS"). IT IS DELIVERED TO OTHERS ON THE EXPRESS CONDITION THAT IT WILL BE USED ONLY FOR OR ON BEHALF OF OTIS THAT NEITHER IT NOR THE INFORMATION IT CONTAINS WILL BE REPRODUCED OR DISCLOSED, IN WHOLE OR IN PART, WITHOUT THE PRIOR WRITTEN CONSENT OF OTIS, AND THAT ON DEMAND IT AND ANY COPIES WILL BE PROMPTLY RETURNED TO OTIS.

UNPUBLISHED WORK © ELEVATOR COMPANY
ALL RIGHTS RESERVED.

Otis
A United Technologies Company

Wiring Diagram
ACD4-MR

MATERIAL:

SPEC:

FINISH:

DWG	KAA21311AAF
	OTIS ENGINEERING CENTER SHANGHAI
DRAWN	JS YUN
CHK	DH PARK/DH RYU
APPD	JS LIM
AUTH	CN366761
ORIGINAL DATE	2014-04-08
150 SHEETS	SHEET 1

ALL DIMENSIONS METRIC

DRAFTED IN ACCORDANCE WITH OTIS DOCUMENT 52847

Characteristics

Item	Value
Type	
Model	IRIS1 NV / GeN2 MMR/MRL
Controller	ACD4MR
Code	KOREAN CODE
operation	FCL
Drive	4.6 ~ 16.9 kW (IRIS1 NV)
Motorpower	4.3 ~ 18.7 kW (GeN2 MMR)
Machine	BOMCO-W GGP / Optimized GeN2
Arrangement	above
Type	OVFR3B 401/2/3
Rated load	450 -1600 kg
Nominal speed	1.0-1.75 m/s
Supply	
Earthing	TN-S
Phases	3
Voltage	380/400/415/440 V
Frequency	50/60 Hz
Doors	
Type	CLD/TLD
Drive	PM DOOR
Voltage	220 V
Rear door	Y / N
Car operating panel	
Count	1/2/3
Fixture	CPI-K
Alarm and light	
Alarm type	ECU-2
Car light	CFL-1
Brake and Blower	
Brake type	DC
Brake volt	48VDC / 110V
Brake current	-- A
Fan voltage	220V
Hall Fixture Configuration	1F1R(1Floor/1RS14) 2F1R(2Floor/1RS14)

Feature	Description	
ACCB	Audible Car Call Button	카콜 등록 신호
ADO	Advanced Door Opening	러닝 오픈기능
ALARB	Alarm Bell	Alarm Bell
ANS	Anti-nuisance protection	장난방지
APD	Radio-Interference Filter	Radio-Interference Filter
ARD-1	Automatic Car Return Device	기준층 복귀기능
ATT-2	Attendant Service Operation	수동운전
BFS	Oil Buffer Switch	오일버퍼 스위치
BSM	Basement Service	지하층 서비스 기능
CBM	Car Button Mechnical	마이크로 스위치 카 버튼
CDD-LRD	Car Door Detector-Light Ray Device	도어 광전 장치
CDD-IRC2D	Car Door Detector-IRC2D	멀티 포토 - 2D
CDD-IRC3D	Car Door Detector IRC3D	멀티 포토 - 3D
CFL1	Fluorescent Car Light	형광등식 카 조명
CHT4	Separate Car and Hall Call Door Times	승장콜, 카콜 도어 타임
CPI-K2	Car Position Indicator - Korean DOT	카위치 표시기 Dot
CPI-K1	Car Position Indicator - Korean Segment	카위치 표시기 Digital
CTTL1	Car Tell Tale Lights	카콜 등록 램프(버튼램프)
CWS-1	Counterweight	카운터웨이트 (안전장치 무)
DCB1	Door Close Button	도어 닫힘 버튼
DDP	Delayed Drive Protection	공회전(카구속)검출기능
DHB-1	Door Hold Button	도어 연장 오픈 기능
DOB1	Door Open Button	도어 열림 버튼
DSBD	Door Switch Bridging Device.	도어 브릿지 장치
DTG4	INCREMENTAL ENCODER	엔코더(인크리멘털)
DTP	Door Time Protection	도어 모터 보호 기능
DXT-1	Extra Door Time	로비층 도어타임 연장 기능
DZI	Door Zone Indicator	오픈존 인디케이터
ECU2	Emergency Car Light Unit	정전시 카 조명 장치
EEC	Top of Car Emergency Exit	카 상부 비상구
EFO1	Emergency Fireman Operation	화재관제 운전
EFS	Emergency Fireman Service	비상운전(수출)
EFS-K	Korean Fireman Service	국내 비상용
EPOA	Emergency Power Operation EPO A	자가발 자동 귀착 운전
ERO-1	Electrical Recall Operation	ERO운전(제어반)
ESS-1	Emergency Stop ESS1	카내 정지 스위치
FAN1	Fan Controlled	자동점멸 팬
FLS-2	Final Limit Switches - UDLS	종단 비상 정지 스위치 (카상부)
GTC	Governor Tension Contact	조속기 텐션 장치 처짐 감지 스위치
HBM	Hall Button Mechnical	마이크로 수위치 승장 버튼
HPI-K2	Hall Position Indicator - Korean Dot	승장위치 표시기 (DOT)
HPI-K1	Hall Position Indicator - Korean Segment	승장위치 표시기 (Digital)
SHL	Hall Direction Signals Configuration	승장 랜턴
HTTL	Hall Tell Tale Lights	승장버튼 등록 램프(버튼)
ICU1	Intercommunication Unit	통화장치(인터폰)
ISC1	Independent Service	전용운전
LIH5	Light in Hoistway	승강로 내 조명
LNS	Load Non Stop Device	80%부하시 승장 무정지 기능
NDG	Nudging	도어 강제 닫힘기능
OCB	Overload Circuit Breaker	과전류 차단기
OLD	Overload Device	110%부하 검출
OS-1	Overspeed Switch	과속 감지 스위치
PES1	PIT Emergency Stop Switch 1	1차 피트 비상 정지 스위치
PES2	PIT Emergency Stop Switch 2	2차 피트 비상정지 스위치
PKS1	Parking Operation	파킹운전
RLEV1	Relevelling Operation	재 착상(로프 늘어남) 기능
SCS-1	Slack Chain/Rope Switch	체인/로프 파단 안전 스위치
SKL-1	Car Light Disconnecting Switch	카 조명 차단기

Feature	Description	
SL	Short Landing Distance	단층고(표준이하)이동 기능
SLS-1	Up Final Limit Switch for Inspection (on car)	강제 감속기능(카상부 저속운전시)
SOS	Safety Overspeed Switch	조속기 스위치
SSM-K	Speech Synthesis Module SSM1	안내방송장치(Korean)
TCIB	Top of Car Inspection Button	카상부 점검 스위치 (Inspection)
TCL	Top of Car Light	카상부 점검등
TDOS	Top of Car Door Operating Switch	카상부 도어 운전 스위치 (Inspection)
TES-2	Top of Car Emergency Switch	카상부 비상정지 스위치 (보조)
TOCS	Top of Car Socket	카상부 소켓
WCO	Wild Car Operation (WCO/HBP)	카자동운전 기능(승장버튼 전체 고장
UCM-K	Unintended Car Movement Protection-Korea	UCM(Korea)

CHANGES

WARNING

THIS WORK AND THE INFORMATION IT CONTAINS ARE THE PROPERTY OF OTIS ELEVATOR COMPANY ("OTIS"), IT IS DELIVERED TO OTHERS ON THE EXPRESS CONDITION THAT IT WILL BE USED ONLY FOR, OR ON BEHALF OF, OTIS; THAT NEITHER IT NOR THE INFORMATION IT CONTAINS WILL BE REPRODUCED OR DISCLOSED, IN WHOLE OR IN PART, WITHOUT THE PRIOR WRITTEN CONSENT OF OTIS; AND THAT ON DEMAND IT AND ANY COPIES WILL BE PROMPTLY RETURNED TO OTIS.

UNPUBLISHED WORK. © OTIS ELEVATOR COMPANY
ALL RIGHTS RESERVED.

Otis
A United Technologies Company

Wiring Diagram
ACD4-MR

DWG KAA21311AAF

OTIS ENGINEERING CENTER
SHANGHAI

MATERIAL:

SPEC:

FINISH:

DRAWN	JS YUN	ORIGINAL DATE
CHK	DH PARK/DH RYU	2014-04-08
APPD	JS LIM	
AUTH	CN366761	150 SHEETS
		SHEET 1-1

ALL DIMENSIONS METRIC

DRAFTED IN ACCORDANCE WITH OTIS DOCUMENT 52847

Parameter Table for DRIVE : Service Tool Key sequence ' M - 2 - 3 - 1 ' (FOR GeN2 MMR)

Speed [m/min]	Number of Passengers	Duty Load [kg]	Motor Capacity [kW]	Applied Drive Type	Drive Parameter					Machine
					Drive Type	Motor Type	Rated RPM [RPM]	Encoder ppr	Duty Speed [mm/s]	
60	8	550	4.3	401	15	201	477	4096	1000	TAA20220S572
	9	600	4.3	401	15	201	477	4096	1000	TAA20220S572
	10	680	6.3	402	20	207	477	4096	1000	TAA20220V571
	11	750	6.3	402	20	207	477	4096	1000	TAA20220V571
	13	900	6.3	402	20	207	477	4096	1000	TAA20220V571
	15	1000	6.3	402	20	207	477	4096	1000	TAA20220V571
	17	1150	7.7	403	30	212	371	4096	1000	2.6T 54X2
	20	1350	10.4	403	30	303	371	4096	1000	3.2T 54X3
	24	1600	10.4	403	30	403	330	4096	1000	4.1T 54X1
90	8	550	7.3	402	20	105	716	4096	1500	TAA20220X571
	9	600	7.3	402	20	105	716	4096	1500	TAA20220X571
	10	680	10.1	403	30	902	716	4096	1500	TAA20220V576
	11	750	10.1	403	30	902	716	4096	1500	TAA20220V576
	13	900	10.1	403	30	902	716	4096	1500	TAA20220V576
	15	1000	10.1	403	30	902	716	4096	1500	TAA20220V576
	17	1150	13.5	404	41	214	556	4096	1500	2.6T 57X2
	20	1350	18.7	404	41	404	494	4096	1500	4.1T 56X1
	24	1600	18.7	404	41	404	494	4096	1500	4.1T 56X1
105	8	550	7.3	402	20	105	835	4096	1750	TAA20220X571
	9	600	7.3	402	20	105	835	4096	1750	TAA20220X571
	10	680	10.1	403	30	902	835	4096	1750	TAA20220V576
	11	750	10.1	403	30	902	835	4096	1750	TAA20220V576
	13	900	10.1	403	30	902	835	4096	1750	TAA20220V576
	15	1000	10.1	403	30	902	835	4096	1750	TAA20220V576
	17	1150	13.5	403	30	214	649	4096	1750	2.6T 57X2
	20	1350	18.7	404	41	404	576	4096	1750	4.1T 56X1
	24	1600	18.7	404	41	404	576	4096	1750	4.1T 56X1

Note. 1. These parameter table is just for information. To check the exact value applied, must check the DRIVE Parameter list.
위의 Parameter Table은 단지 참고용이며, 납선에 적용된 값은 납선별 DRIVE Parameter List를 확인 할 것.

CHANGES

WARNING
THIS WORK AND THE INFORMATION IT CONTAINS ARE THE PROPERTY OF OTIS ELEVATOR COMPANY ("OTIS"), IT IS DELIVERED TO OTHERS ON THE EXPRESS CONDITION THAT IT WILL BE USED ONLY FOR OR ON BEHALF OF OTIS, THAT NEITHER IT NOR THE INFORMATION IT CONTAINS WILL BE REPRODUCED OR DISCLOSED, IN WHOLE OR IN PART, WITHOUT THE PRIOR WRITTEN CONSENT OF OTIS, AND THAT ON DEMAND IT AND ANY COPIES WILL BE PROMPTLY RETURNED TO OTIS.
UNPUBLISHED WORK. © ELEVATOR COMPANY
ALL RIGHTS RESERVED.

Wiring Diagram
ACD4-MR

MATERIAL:
SPEC:
FINISH:

DWG KAA21311AAF
OTIS ENGINEERING CENTER
SHANGHAI

DRAWN	JS YUN	ORIGINAL DATE 2014-04-08
CHK	DH PARK/DH RYU	
APPD	JS LIM	
AUTH	CN366761	150 SHEETS
		SHEET 1-2

ALL DIMENSIONS METRIC

DRAFTED IN ACCORDANCE WITH OTIS DOCUMENT 52847

Parameter Table for DRIVE : Service Tool Key sequence ' M - 2 - 3 - 1 ' (FOR SM1)

Speed [m/min]	Number of Passengers	Duty Load [kg]	Motor Capacity [kW]	Applied Drive Type	Drive Parameter					Machine
					Drive Type	Motor Type	Rated RPM [RPM]	Encoder ppr	Duty Speed [mm/s]	
60	6	450	4.6	401	15	321	96	8192	1000	BOCMO-W
	8	550	4.6	401	15	321	96	8192	1000	
	9	600	4.6	402	20	321	96	8192	1000	
	10	680	5.5	402	20	323	96	8192	1000	
	11	750	5.5	402	20	323	96	8192	1000	
	13	900	6.7	402	20	325	96	8192	1000	
	15	1000	6.7	402	20	325	96	8192	1000	
90	8	550	6.9	402	20	322	143	8192	1500	BOCMO-W
	9	600	6.9	402	20	322	143	8192	1500	
	10	680	8.3	403	30	324	143	8192	1500	
	11	750	8.3	403	30	324	143	8192	1500	
	13	900	10	403	30	326	143	8192	1500	
	15	1000	10	403	30	326	143	8192	1500	
105	8	550	8.1	402	20	322	168	8192	1750	BOCMO-W
	9	600	8.1	402	20	322	168	8192	1750	
	10	680	9.7	403	30	324	168	8192	1750	
	11	750	9.7	403	30	324	168	8192	1750	
	13	900	11.7	403	30	326	168	8192	1750	
	15	1000	11.7	403	30	326	168	8192	1750	

Note. 1. These parameter table is just for information. To check the exact value applied, must check the DRIVE Parameter list.
위의 Parameter Table은 단지 참고용이며, 납선에 적용된 값은 납선별 DRIVE Parameter List를 확인 할 것.

CHANGES

WARNING
THIS WORK AND THE INFORMATION IT CONTAINS ARE THE PROPERTY OF OTIS ELEVATOR COMPANY ("OTIS") IT IS DELIVERED TO OTHERS ON THE EXPRESS CONDITION THAT IT WILL BE USED ONLY FOR OR ON BEHALF OF OTIS, THAT NEITHER IT NOR THE INFORMATION IT CONTAINS WILL BE REPRODUCED OR DISCLOSED, IN WHOLE OR IN PART, WITHOUT THE PRIOR WRITTEN CONSENT OF OTIS, AND THAT ON DEMAND IT AND ANY COPIES WILL BE PROMPTLY RETURNED TO OTIS.
UNPUBLISHED WORK. © ELEVATOR COMPANY
ALL RIGHTS RESERVED.

Otis
A United Technologies Company

Wiring Diagram
ACD4-MR

MATERIAL:
SPEC:
FINISH:

DWG KAA21311AAF
OTIS ENGINEERING CENTER
SHANGHAI

DRAWN	JS YUN	ORIGINAL DATE 2014-04-08
CHK	DH PARK/DH RYU	
APPD	JS LIM	
AUTH	CN366761	150 SHEETS
		SHEET 1-2

ALL DIMENSIONS METRIC

DRAFTED IN ACCORDANCE WITH OTIS DOCUMENT 52847

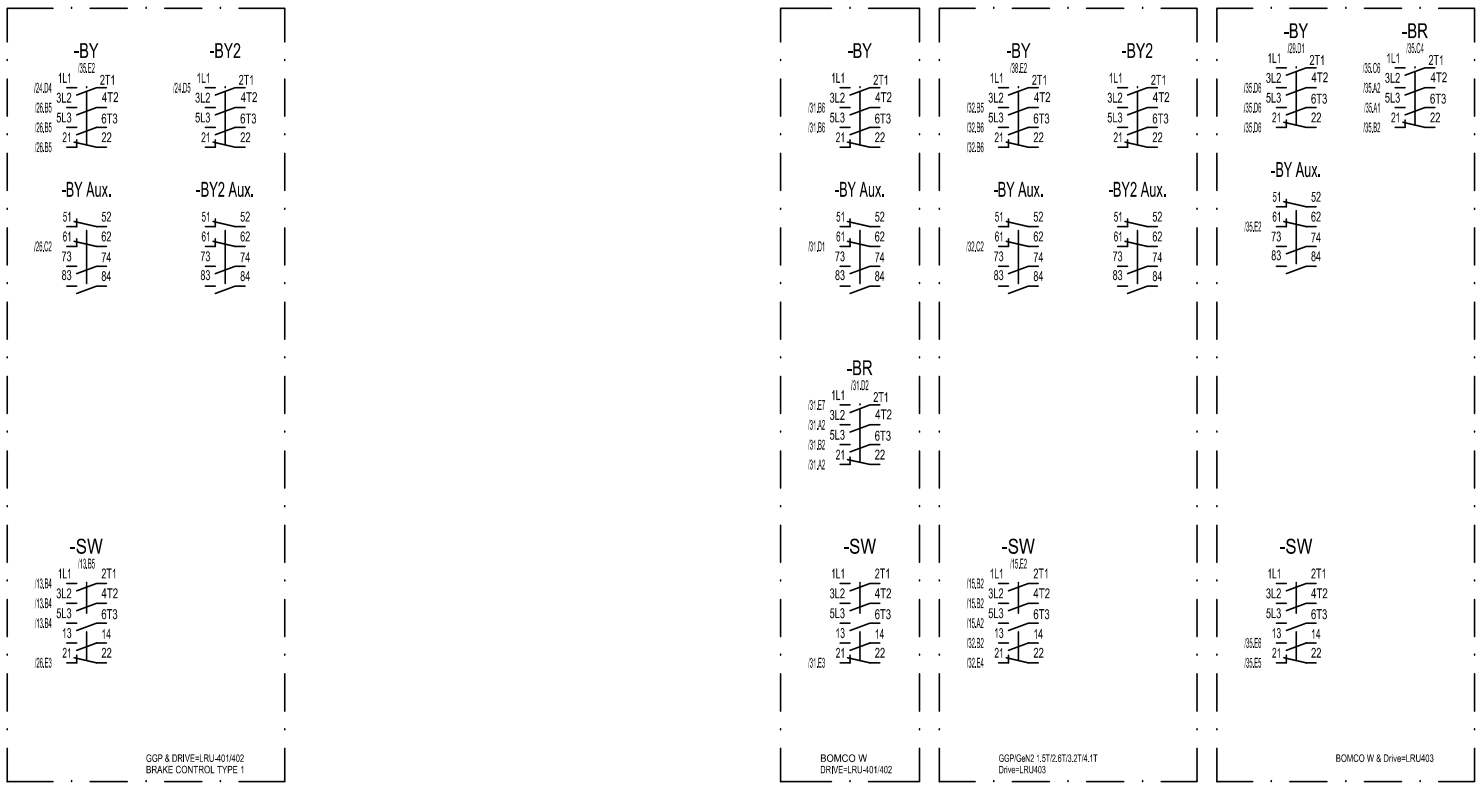

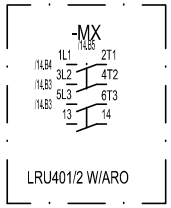

Brake Control Type Description:
Brake Control Type1: Internal brake control;(With BY)
Brake Control Type2: External brake control;(With BY/BR)

CHANGES

WARNING
THIS WORK AND THE INFORMATION IT CONTAINS ARE THE PROPERTY OF OTIS ELEVATOR COMPANY ("OTIS"). IT IS DELIVERED TO OTHERS ON THE EXPRESS CONDITION THAT IT WILL BE USED ONLY FOR, OR ON BEHALF OF OTIS THAT NEITHER IT NOR THE INFORMATION IT CONTAINS WILL BE REPRODUCED OR DISCLOSED, IN WHOLE OR IN PART, WITHOUT THE PRIOR WRITTEN CONSENT OF OTIS, AND THAT ON DEMAND IT AND ANY COPIES WILL BE PROMPTLY RETURNED TO OTIS.
UNPUBLISHED WORK ©2014 OTIS ELEVATOR COMPANY
ALL RIGHTS RESERVED.

Otis
A United Technologies Company

Wiring Diagram
ACD4-MR

MATERIAL:
SPEC:
FINISH:

DWG KAA21311AAF
OTIS ENGINEERING CENTER
SHANGHAI

DRAWN	JS YUN	ORIGINAL DATE
CHK	DH PARK/DH RYU	2014-04-08
APPD	JS LIM	
AUTH	CN366761	150 SHEETS
		SHEET 2

ALL DIMENSIONS METRIC

DRAFTED IN ACCORDANCE WITH OTIS DOCUMENT 52847

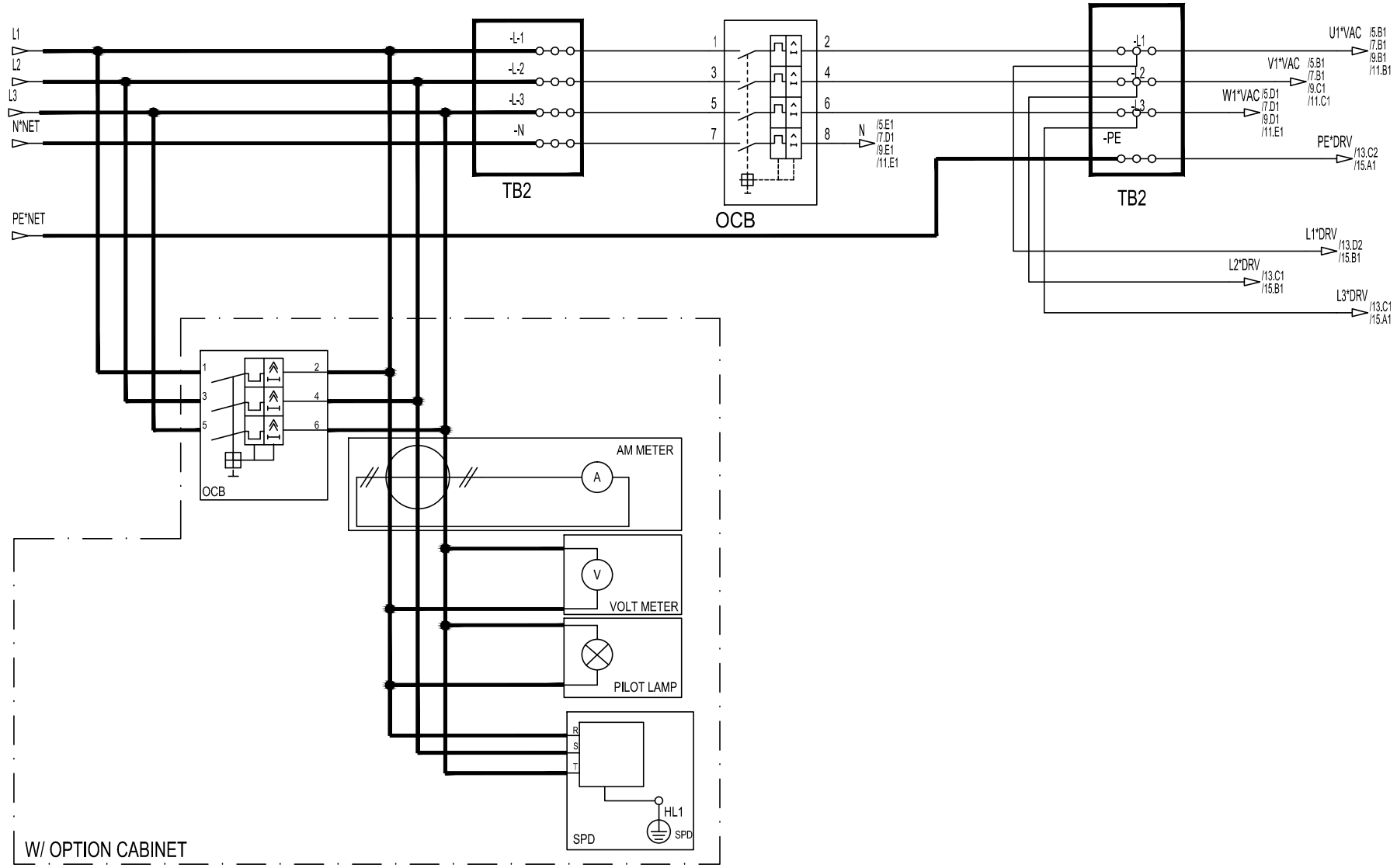

KOREA & W/O ARO

CHANGES

WARNING
THIS WORK AND THE INFORMATION IT CONTAINS ARE THE PROPERTY OF OTIS ELEVATOR COMPANY ("OTIS"). IT IS DELIVERED TO OTHERS ON THE EXPRESS CONDITION THAT IT WILL BE USED ONLY FOR OR ON BEHALF OF OTIS THAT NEITHER IT NOR THE INFORMATION IT CONTAINS WILL BE REPRODUCED OR DISCLOSED, IN WHOLE OR IN PART, WITHOUT THE PRIOR WRITTEN CONSENT OF OTIS, AND THAT ON DEMAND IT AND ANY COPIES WILL BE PROMPTLY RETURNED TO OTIS.
UNPUBLISHED WORK © ELEVATOR COMPANY
ALL RIGHTS RESERVED.

Otis
A United Technologies Company

Wiring Diagram
ACD4-MR

MATERIAL:
SPEC:
FINISH:

DWG KAA21311AAF
OTIS ENGINEERING CENTER
SHANGHAI

DRAWN	JS YUN	ORIGINAL DATE
CHK	DH PARK/DH RYU	2014-04-08
APPD	JS LIM	
AUTH	CN366761	150 SHEETS
		SHEET 3

ALL DIMENSIONS METRIC

DRAFTED IN ACCORDANCE WITH OTIS DOCUMENT 52847

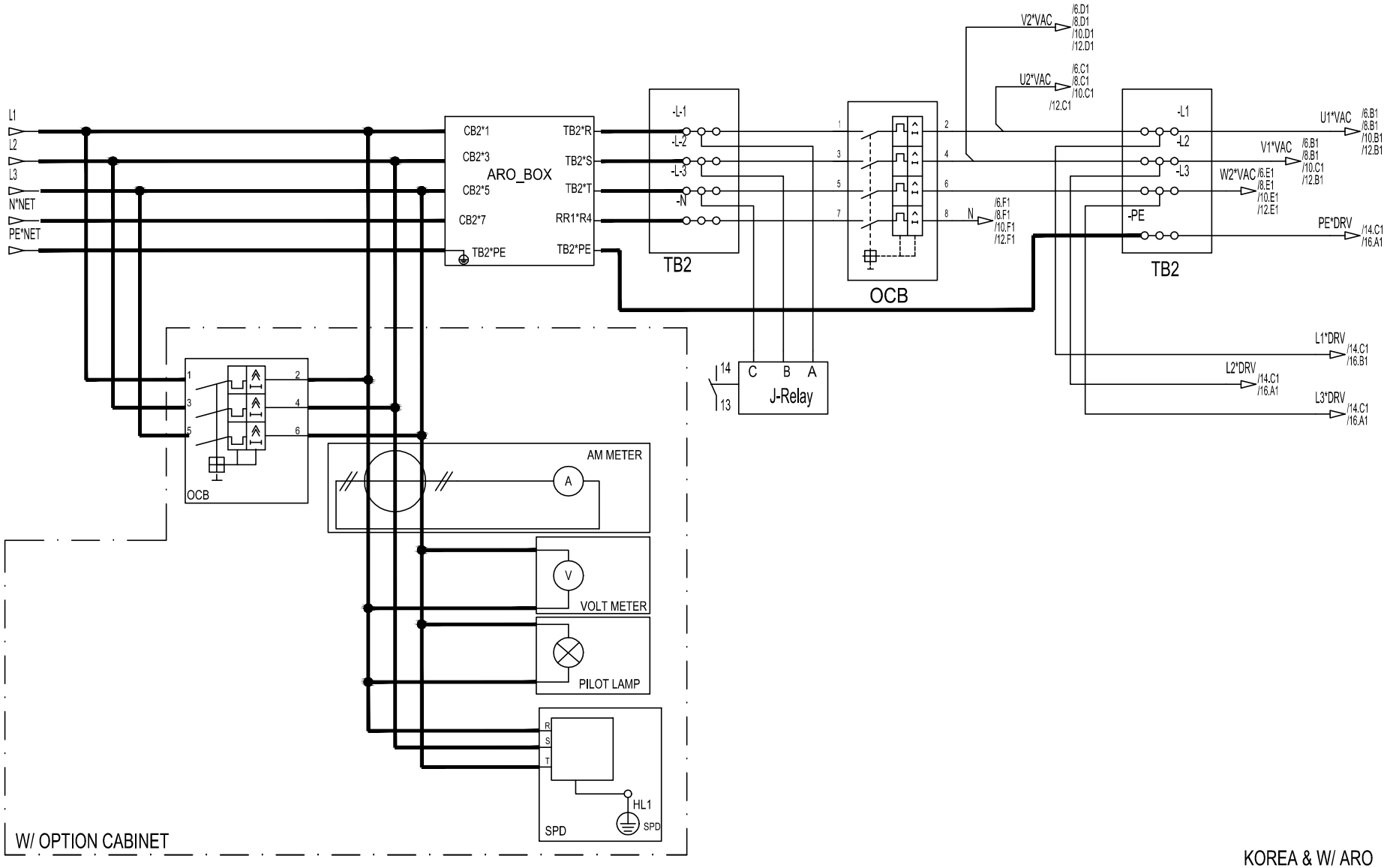

CHANGES

WARNING
THIS WORK AND THE INFORMATION IT CONTAINS ARE THE PROPERTY OF OTIS ELEVATOR COMPANY ("OTIS"). IT IS SUBMITTED TO OTHERS ON THE EXPRESS CONDITION THAT IT WILL BE USED ONLY FOR OR ON BEHALF OF OTIS THAT REFER IT FOR. THE INFORMATION IT CONTAINS WILL BE REPRODUCED OR DISCLOSED, IN WHOLE OR IN PART, WITHOUT THE PRIOR WRITTEN CONSENT OF OTIS, AND THAT ON DEMAND IT AND ANY COPIES WILL BE PROMPTLY RETURNED TO OTIS.
UNPUBLISHED WORK © ELEVATOR COMPANY
ALL RIGHTS RESERVED.

Otis
A United Technologies Company

Wiring Diagram ACD4-MR	DWG DAA21310BH	
	OTIS ENGINEERING CENTER SHANGHAI	
MATERIAL:	DRAWN JS YUN	ORIGINAL DATE 2014-04-08
	CHK DH PARK/DH RYU	
	APPD JS LIM	
SPEC:	AUTH CN366761	150 SHEETS
FINISH:		SHEET 4

ALL DIMENSIONS METRIC

DRAFTED IN ACCORDANCE WITH OTIS DOCUMENT 52847

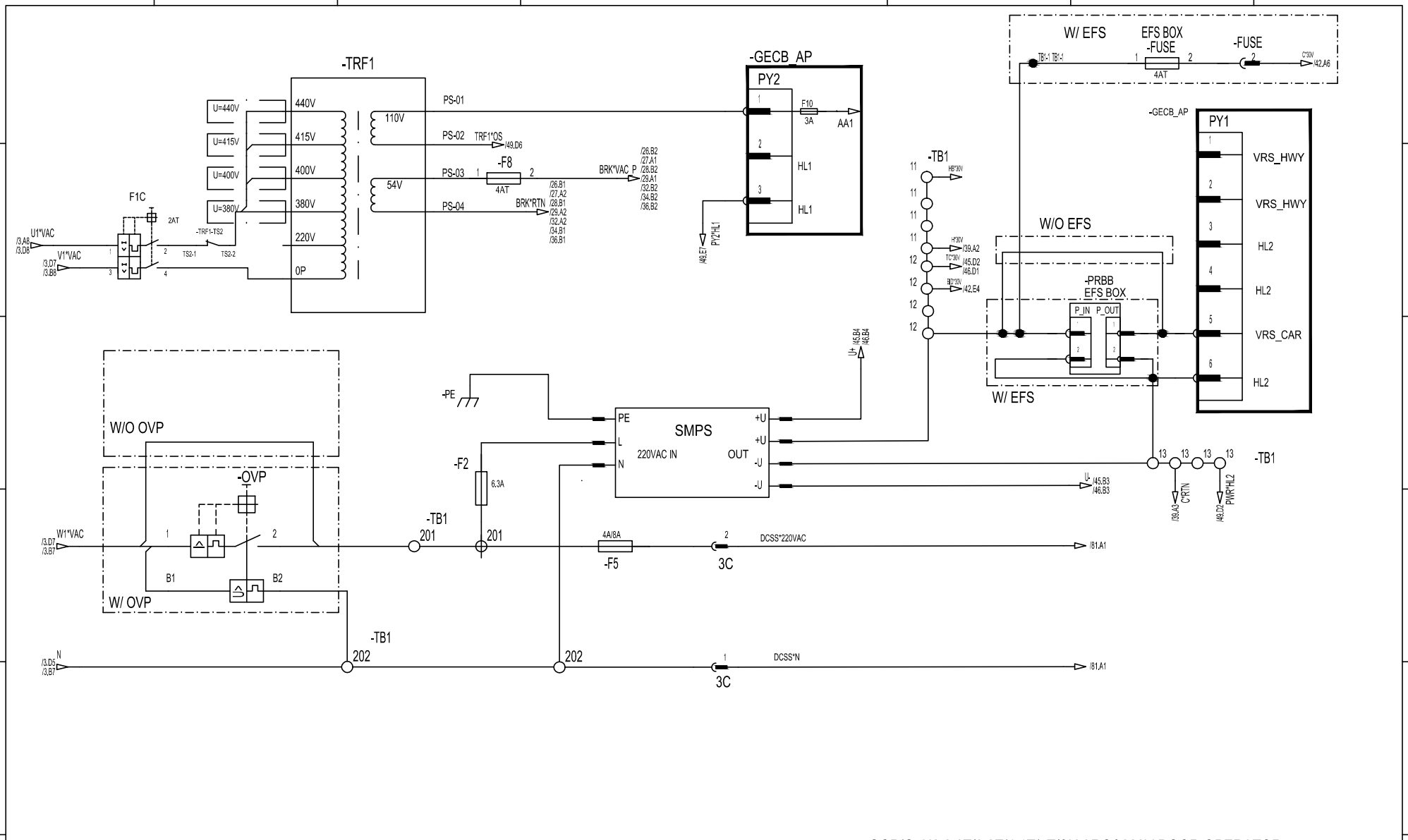

GGP/GeN2 2.6T/3.2T/4.1T/5T/&X ARO&220V DOOR OPERATOR

CHANGES		
2013-3-21	<3	Add F1C;
Minjie Pan CN396877		

WARNING
THIS WORK AND THE INFORMATION IT CONTAINS ARE THE PROPERTY OF OTIS ELEVATOR COMPANY ("OTIS"). IT IS DELIVERED TO OTHERS ON THE EXPRESS CONDITION THAT IT WILL BE USED ONLY FOR OR ON BEHALF OF OTIS, THAT NEITHER IT NOR THE INFORMATION IT CONTAINS WILL BE REPRODUCED OR DISCLOSED, IN WHOLE OR IN PART, WITHOUT THE PRIOR WRITTEN CONSENT OF OTIS, AND THAT ON DEMAND IT AND ANY COPIES WILL BE PROMPTLY RETURNED TO OTIS.
UNPUBLISHED WORK. © ELEVATOR COMPANY
ALL RIGHTS RESERVED.

Otis
A United Technologies Company

Wiring Diagram ACD4-MR	DWG	KAA21311AAF	
	OTIS ENGINEERING CENTER SHANGHAI		
MATERIAL:	DRAWN	JS YUN	ORIGINAL DATE 2014-04-08
	CHK	DH PARK/DH RYU	
	APPD	JS LIM	
SPEC:	AUTH	CN366761	150 SHEETS
FINISH:			SHEET 5

ALL DIMENSIONS METRIC

DRAFTED IN ACCORDANCE WITH OTIS DOCUMENT 52847

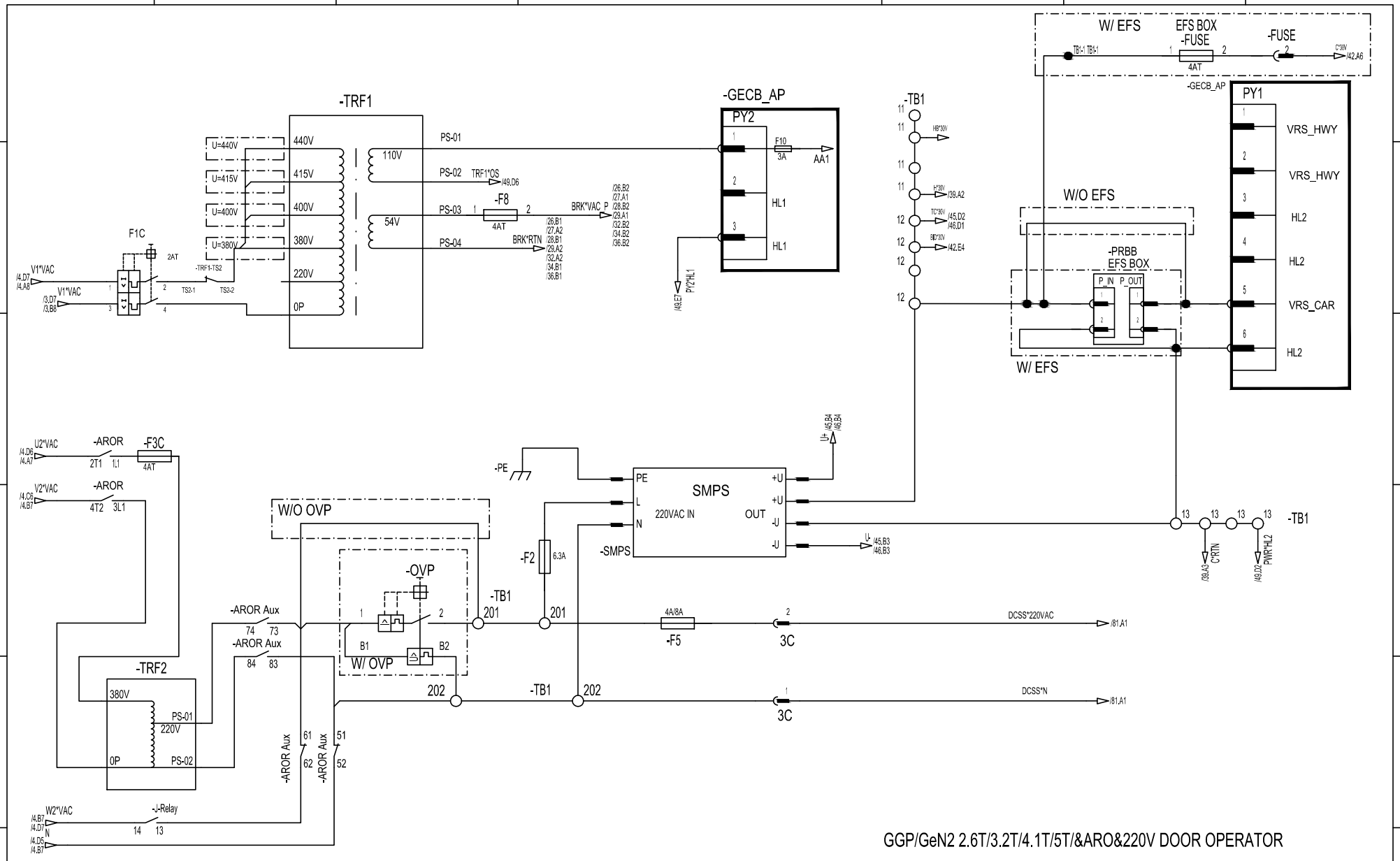

GGP/GeN2 2.6T/3.2T/4.1T/5T/&ARO&220V DOOR OPERATOR

CHANGES		
2013-3-21	<3	Add F1C;
		Minjie Pan CN396877

WARNING
THIS WORK AND THE INFORMATION IT CONTAINS ARE THE PROPERTY OF OTIS ELEVATOR COMPANY ("OTIS"). IT IS BELIEVED TO OTHERS ON THE EXPRESS CONDITION THAT IT WILL BE USED ONLY FOR OR ON BEHALF OF OTIS THAT NEITHER IT NOR THE INFORMATION IT CONTAINS WILL BE REPRODUCED OR DISCLOSED, IN WHOLE OR IN PART, WITHOUT THE PRIOR WRITTEN CONSENT OF OTIS, AND THAT ON DEMAND IT AND ANY COPIES WILL BE PROMPTLY RETURNED TO OTIS.
UNPUBLISHED WORK © ELEVATOR COMPANY
ALL RIGHTS RESERVED.

Otis
A United Technologies Company

Wiring Diagram ACD4-MR	DWG KAA21311AAF	
	OTIS ENGINEERING CENTER SHANGHAI	
MATERIAL:	DRAWN JS YUN	ORIGINAL DATE 2014-04-08
	CHK DH PARK/DH RYU	
	APPD JS LIM	
SPEC:	AUTH CN366761	150 SHEETS
FINISH:		SHEET 6

ALL DIMENSIONS METRIC

DRAFTED IN ACCORDANCE WITH OTIS DOCUMENT 52847

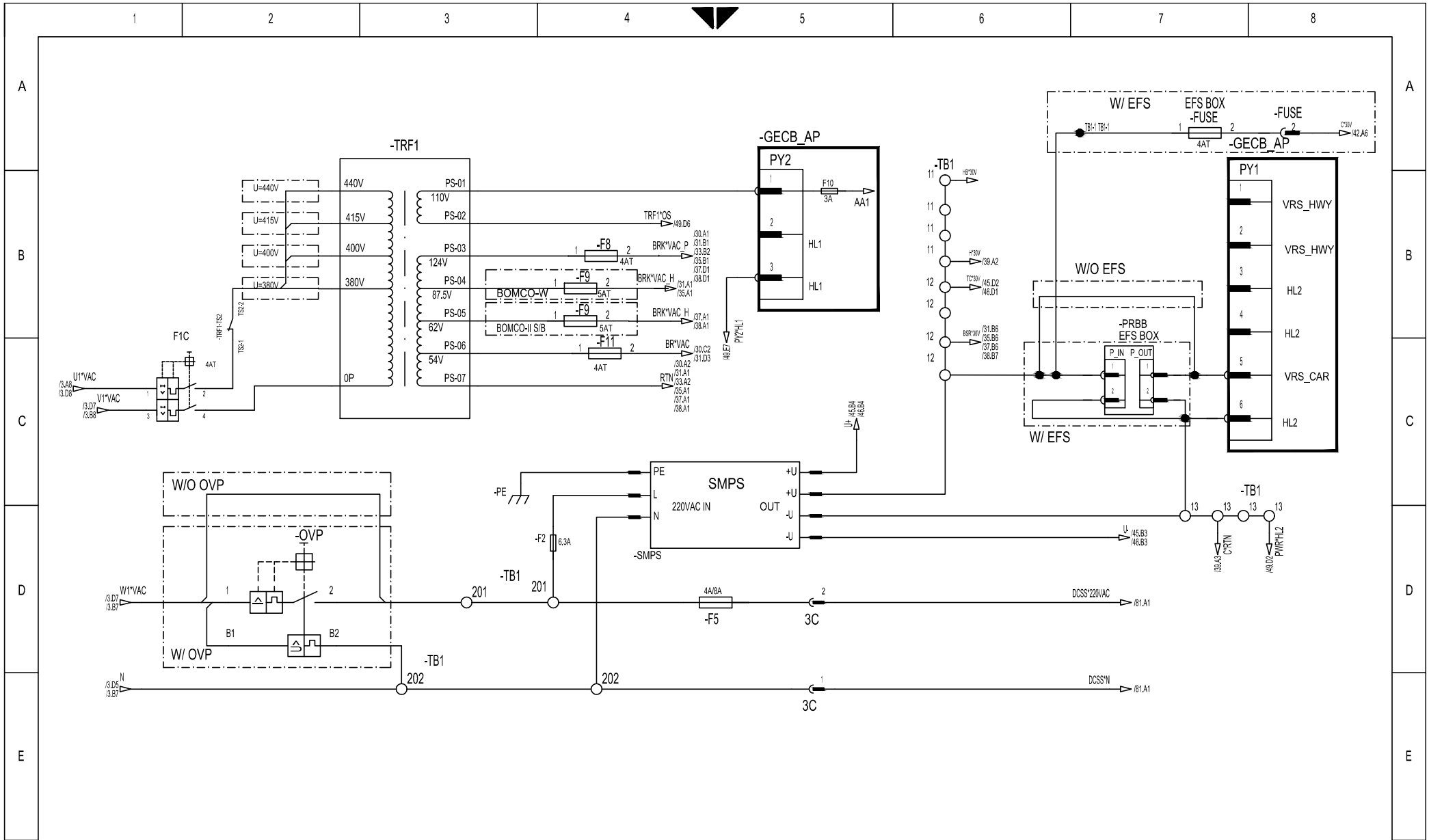

BOMCO W&X ARO&220V DOOR OPERATOR

CHANGES		
2013-3-21	<3 Add F1C;	Minjie Pan CN396877

WARNING
THIS WORK AND THE INFORMATION IT CONTAINS ARE THE PROPERTY OF OTIS ELEVATOR COMPANY ("OTIS") AND ARE TO BE DELIVERED TO OTHERS ON THE EXPRESS CONDITION THAT IT WILL BE USED ONLY FOR OR ON BEHALF OF OTIS, THAT NEITHER IT NOR THE INFORMATION IT CONTAINS WILL BE REPRODUCED OR DISCLOSED, IN WHOLE OR IN PART, WITHOUT THE PRIOR WRITTEN CONSENT OF OTIS, AND THAT ON DEMAND IT AND ANY COPIES WILL BE PROMPTLY RETURNED TO OTIS.
UNPUBLISHED WORK. © ELEVATOR COMPANY
ALL RIGHTS RESERVED.

Otis
A United Technologies Company

Wiring Diagram ACD4-MR	DWG KAA21311AAF		
	OTIS ENGINEERING CENTER SHANGHAI		
MATERIAL:	DRAWN JS YUN	ORIGINAL DATE 2014-04-08	
	CHK DH PARK/DH RYU		
	APPD JS LIM		
SPEC:	AUTH CN366761	150 SHEETS	
FINISH:		SHEET 9	

ALL DIMENSIONS METRIC

DRAFTED IN ACCORDANCE WITH OTIS DOCUMENT 52847

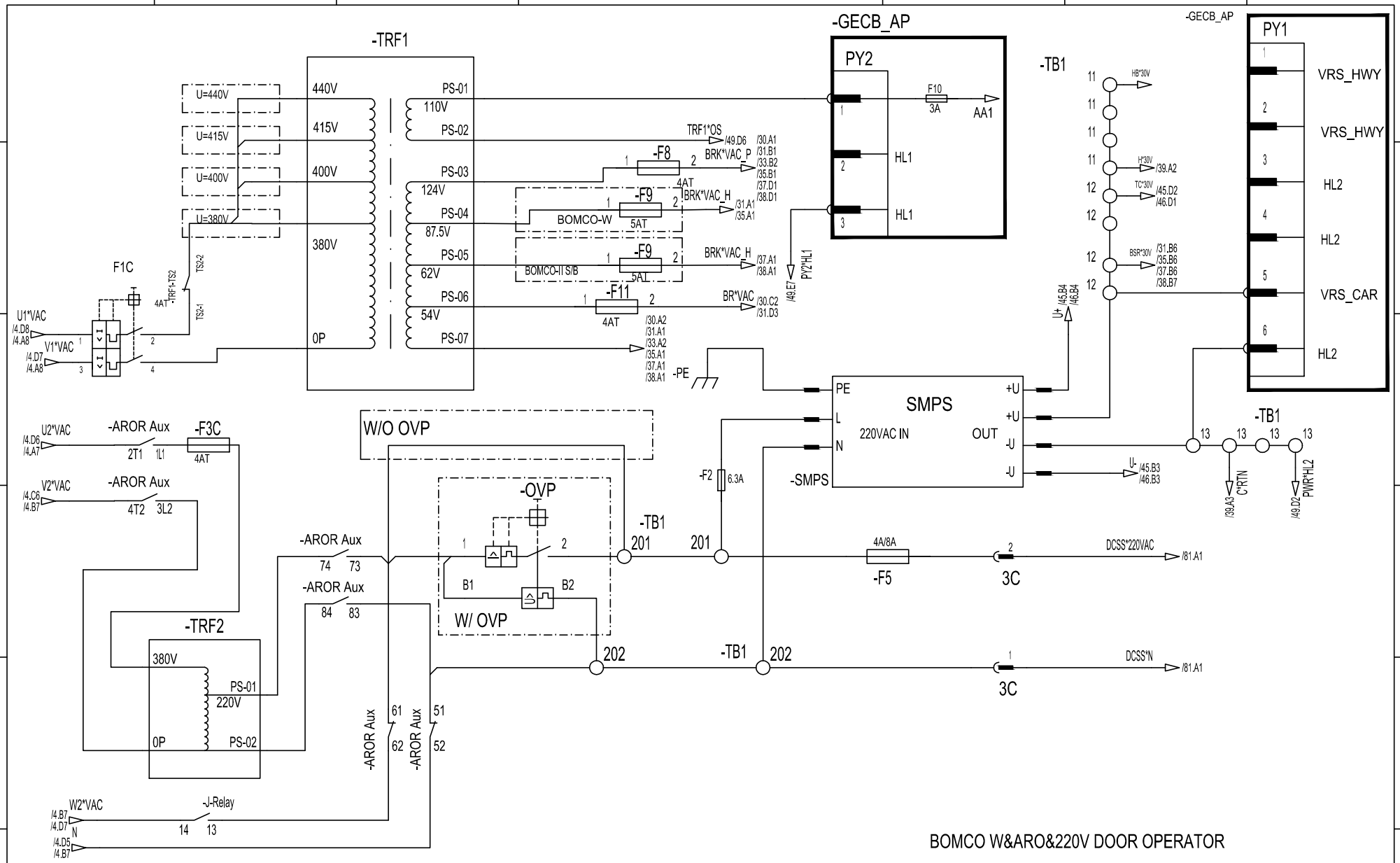

BOMCO W&ARO&220V DOOR OPERATOR

CHANGES		
2013-3-21	<3	Add F1C;
		Minjie Pan CN396877

WARNING
THIS WORK AND THE INFORMATION IT CONTAINS ARE THE PROPERTY OF OTIS ELEVATOR COMPANY ("OTIS"). IT IS SUPPLIED TO OTHERS ON THE EXPRESS CONDITION THAT IT WILL BE USED ONLY FOR OR ON BEHALF OF OTIS THAT NEITHER IT NOR THE INFORMATION IT CONTAINS WILL BE REPRODUCED OR DISCLOSED, IN WHOLE OR IN PART, WITHOUT THE PRIOR WRITTEN CONSENT OF OTIS, AND THAT ON DEMAND IT AND ANY COPIES WILL BE PROMPTLY RETURNED TO OTIS.
UNPUBLISHED WORK © ELEVATOR COMPANY
ALL RIGHTS RESERVED.

Otis
A United Technologies Company

Wiring Diagram ACD4-MR	DWG KAA21311AAF	
	OTIS ENGINEERING CENTER SHANGHAI	
MATERIAL:	DRAWN JS YUN	ORIGINAL DATE 2014-04-08
	CHK DH PARK/DH RYU	
	APPD JS LIM	
SPEC:	AUTH CN366761	150 SHEETS
FINISH:		SHEET 10

ALL DIMENSIONS METRIC

DRAFTED IN ACCORDANCE WITH OTIS DOCUMENT 52847

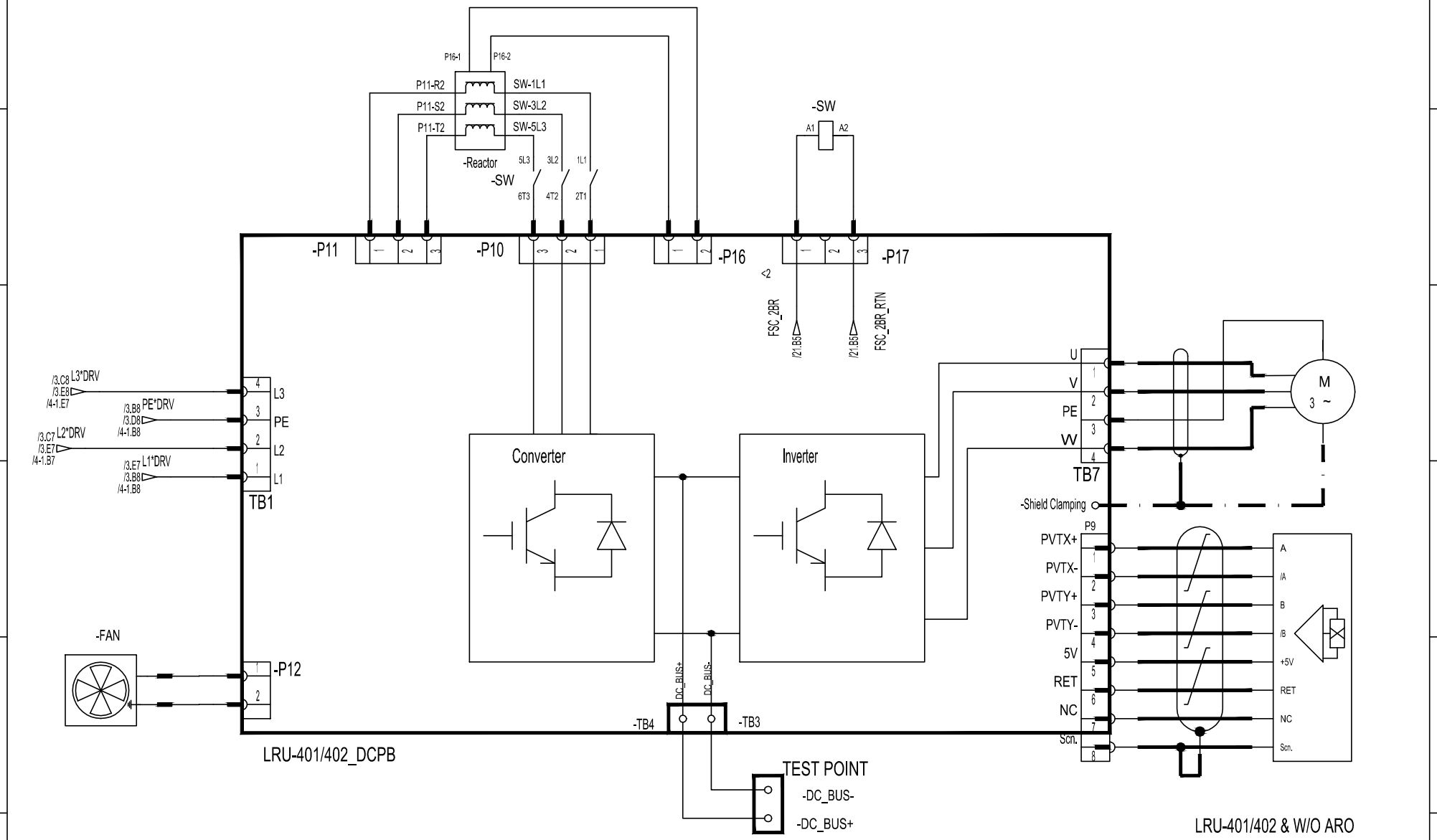

CHANGES		
2013-1-9	<2 Add SW contactor control wiring diagram;	Minjie Pan CN374544

WARNING
THIS WORK AND THE INFORMATION IT CONTAINS ARE THE PROPERTY OF OTIS ELEVATOR COMPANY ("OTIS"). IT IS SUPPLIED TO OTHERS ON THE EXPRESS CONDITION THAT IT WILL BE USED ONLY FOR OR ON BEHALF OF OTIS THAT NEITHER IT NOR THE INFORMATION IT CONTAINS WILL BE REPRODUCED OR DISCLOSED, IN WHOLE OR IN PART, WITHOUT THE PRIOR WRITTEN CONSENT OF OTIS, AND THAT ON DEMAND IT AND ANY COPIES WILL BE PROMPTLY RETURNED TO OTIS.
UNPUBLISHED WORK © ELEVATOR COMPANY
ALL RIGHTS RESERVED.

Otis
A United Technologies Company

Wiring Diagram ACD4-MR	DWG KAA21311AAF	
	OTIS ENGINEERING CENTER SHANGHAI	
MATERIAL:	DRAWN JS YUN	ORIGINAL DATE 2014-04-08
	CHK DH PARK/DH RYU	
	APPD JS LIM	
SPEC:	AUTH CN366761	150 SHEETS
FINISH:		SHEET 13

ALL DIMENSIONS METRIC

DRAFTED IN ACCORDANCE WITH OTIS DOCUMENT 52847

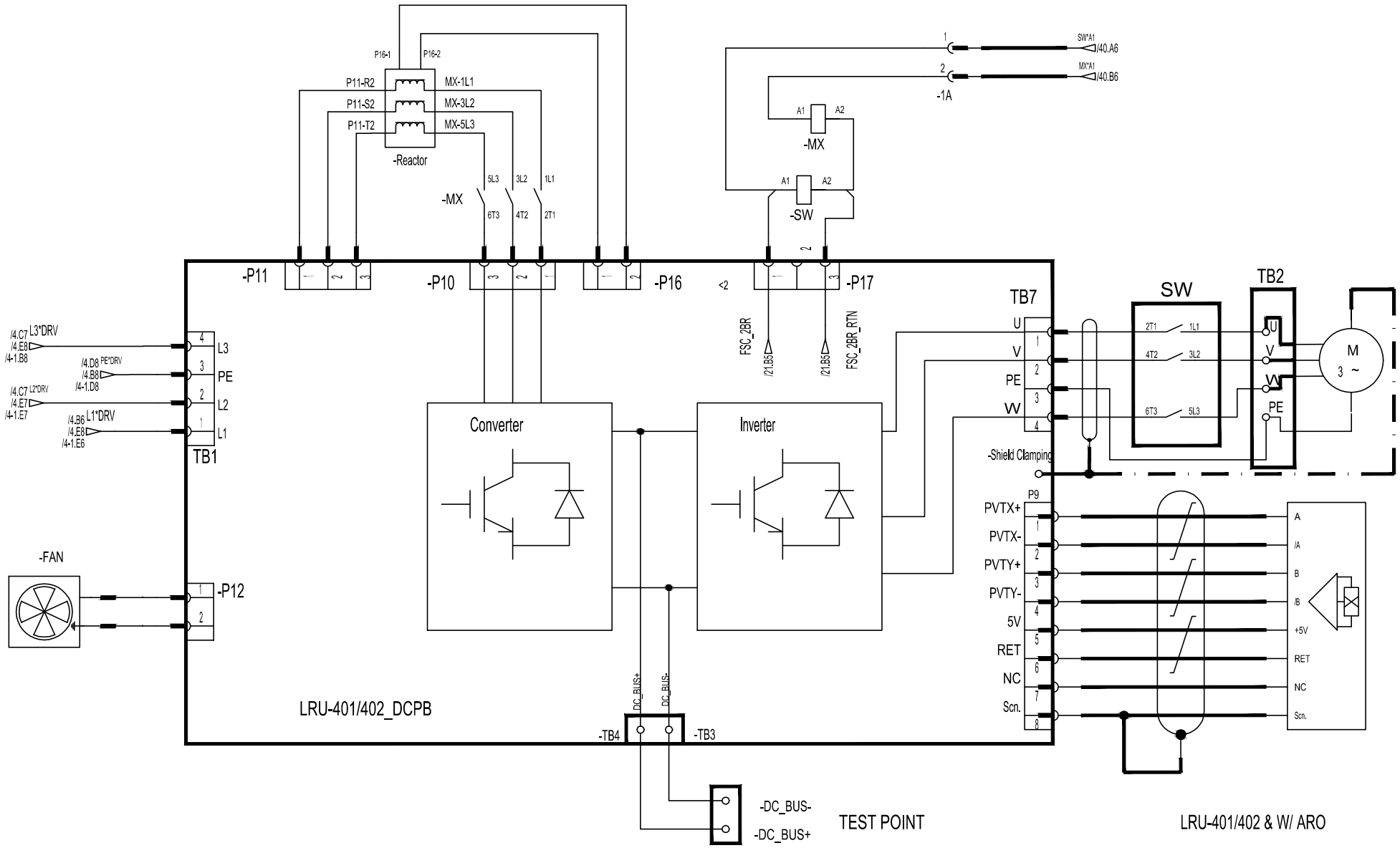

CHANGES		
2013-1-9	<2 Add SW contactor control wiring diagram;	Minjie Pan CN374544

WARNING
THIS WORK AND THE INFORMATION IT CONTAINS ARE THE PROPERTY OF OTIS ELEVATOR COMPANY ("OTIS"). IT IS DELIVERED TO OTHERS ON THE EXPRESS CONDITION THAT IT WILL BE USED ONLY FOR OR ON BEHALF OF OTIS THAT NEITHER IT NOR THE INFORMATION IT CONTAINS WILL BE REPRODUCED OR DISCLOSED, IN WHOLE OR IN PART, WITHOUT THE PRIOR WRITTEN CONSENT OF OTIS, AND THAT ON DEMAND IT AND ANY COPIES WILL BE PROMPTLY RETURNED TO OTIS.
UNPUBLISHED WORK © ELEVATOR COMPANY
ALL RIGHTS RESERVED.

Otis
A United Technologies Company

Wiring Diagram
ACD4-MR

MATERIAL:
SPEC:
FINISH:

DWG	KAA21311AAF
	OTIS ENGINEERING CENTER SHANGHAI
DRAWN	JS YUN
CHK	DH PARK/DH RYU
APPD	JS LIM
AUTH	CN366761
ORIGINAL DATE	2014-04-08
SHEETS	150
SHEET	14

ALL DIMENSIONS METRIC

DRAFTED IN ACCORDANCE WITH OTIS DOCUMENT 52847

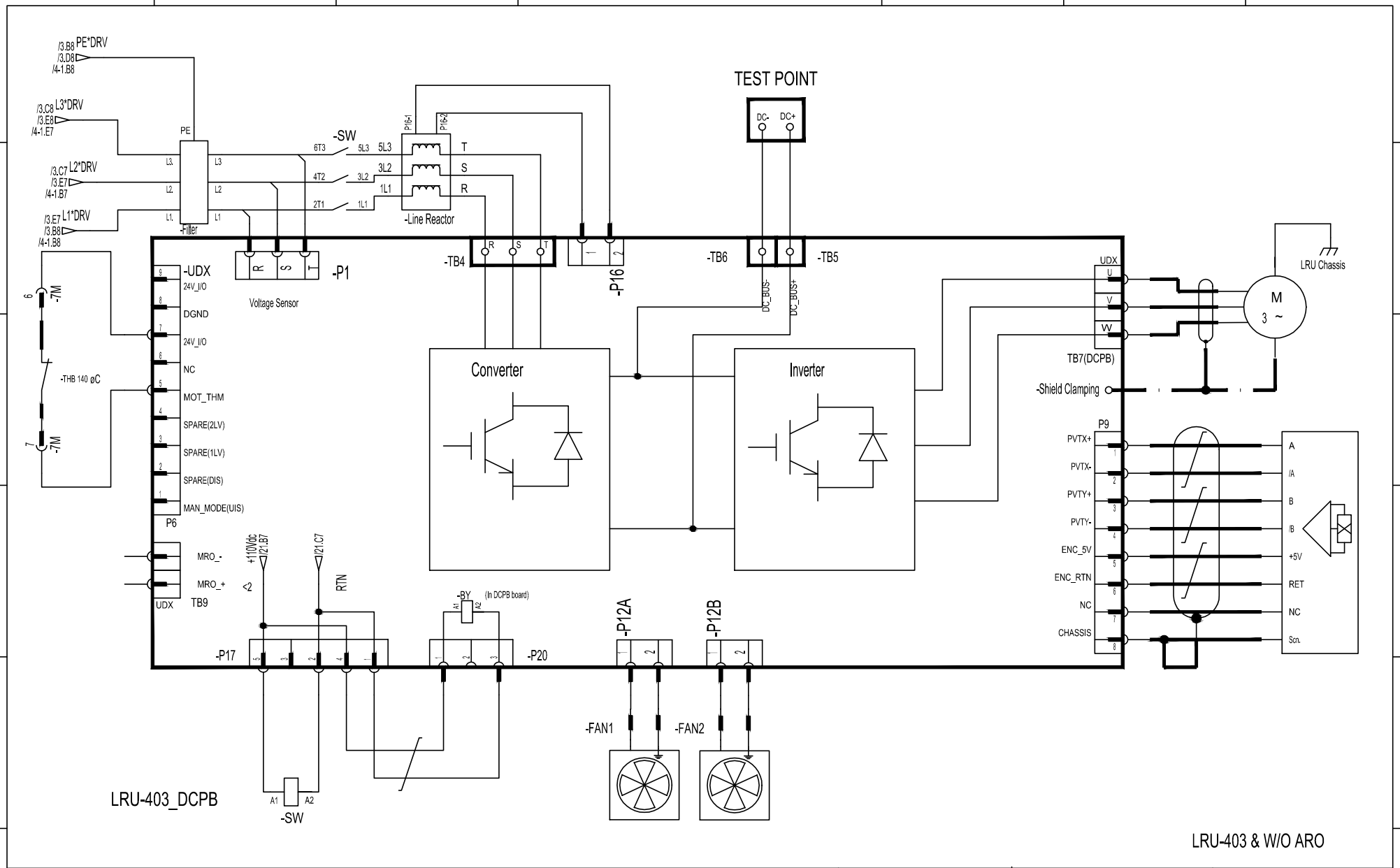

CHANGES		
2013-1-9	<2 Add SW contactor control wiring diagram;	Minjie Pan CN374544

WARNING
THIS WORK AND THE INFORMATION IT CONTAINS ARE THE PROPERTY OF OTIS ELEVATOR COMPANY ("OTIS"). IT IS SUBMITTED TO OTHERS ON THE EXPRESS CONDITION THAT IT WILL BE USED ONLY FOR OR ON BEHALF OF OTIS THAT NEITHER IT NOR THE INFORMATION IT CONTAINS WILL BE REPRODUCED OR DISCLOSED, IN WHOLE OR IN PART, WITHOUT THE PRIOR WRITTEN CONSENT OF OTIS, AND THAT ON DEMAND IT AND ANY COPIES WILL BE PROMPTLY RETURNED TO OTIS.
UNPUBLISHED WORK © ELEVATOR COMPANY
ALL RIGHTS RESERVED.

Otis
A United Technologies Company

Wiring Diagram ACD4-MR	DWG KAA21311AAF	
	OTIS ENGINEERING CENTER SHANGHAI	
MATERIAL:	DRAWN JS YUN	ORIGINAL DATE 2014-04-08
	CHK DH PARK/DH RYU	
	APPD JS LIM	
SPEC:	AUTH CN366761	150 SHEETS
FINISH:		SHEET 15

ALL DIMENSIONS METRIC

DRAFTED IN ACCORDANCE WITH OTIS DOCUMENT 52847

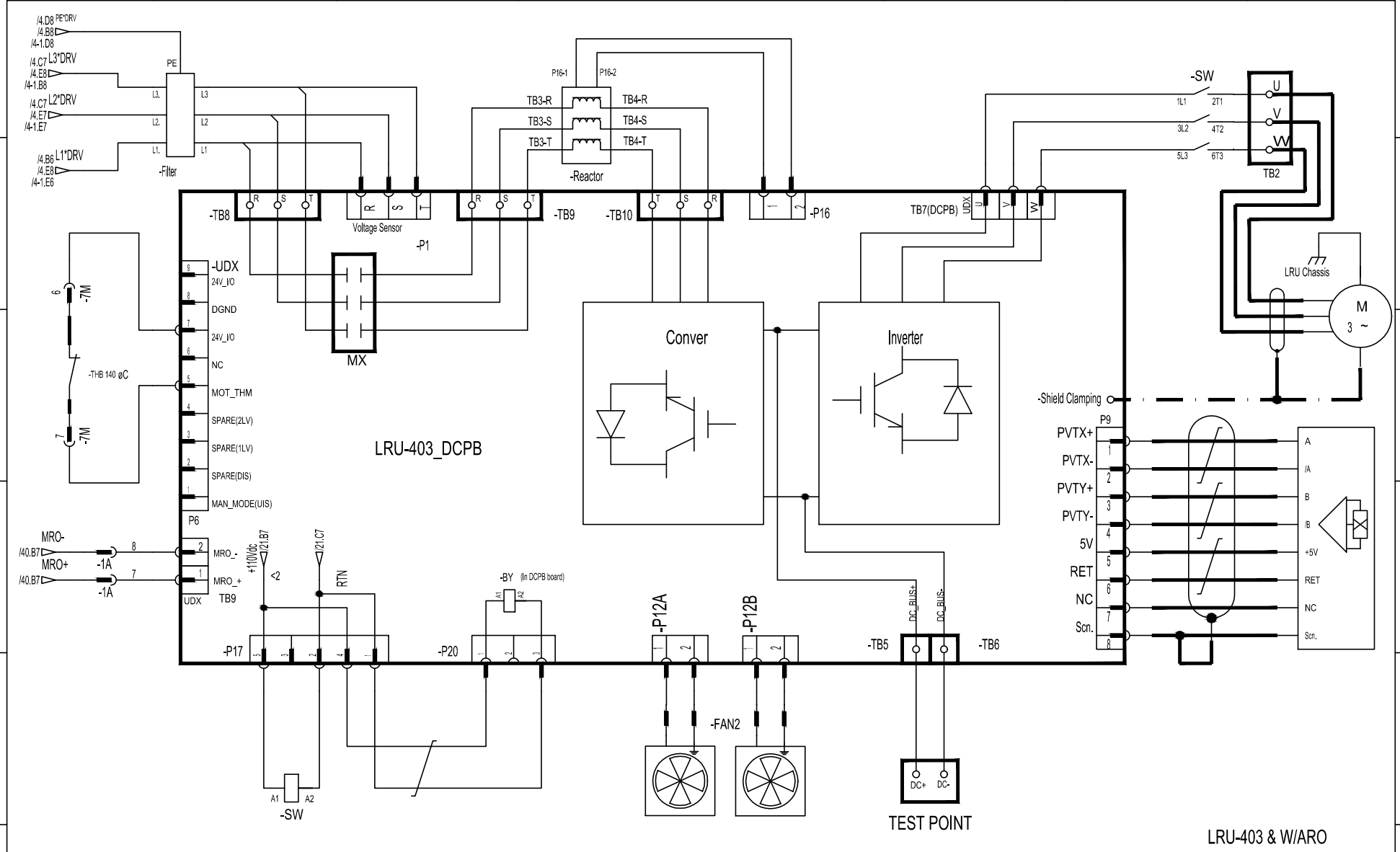

CHANGES		
2013-1-9	<2 Add SW contactor control wiring diagram;	Minjie Pan CN374544

WARNING
THIS WORK AND THE INFORMATION IT CONTAINS ARE THE PROPERTY OF OTIS ELEVATOR COMPANY ("OTIS"), IS DELIVERED TO OTHERS ON THE EXPRESS CONDITION THAT IT WILL BE USED ONLY FOR OR ON BEHALF OF OTIS THAT NEITHER IT NOR THE INFORMATION IT CONTAINS WILL BE REPRODUCED, OR DISCLOSED, IN WHOLE OR IN PART, WITHOUT THE PRIOR WRITTEN CONSENT OF OTIS, AND THAT ON DEMAND BY AND ANY COPIES WILL BE PROMPTLY RETURNED TO OTIS.
UNPUBLISHED WORK © 2013 ELEVATOR COMPANY
ALL RIGHTS RESERVED.

Otis
A United Technologies Company

Wiring Diagram ACD4-MR	DWG KAA21311AAF	
	OTIS ENGINEERING CENTER SHANGHAI	
MATERIAL:	DRAWN JS YUN	ORIGINAL DATE 2014-04-08
	CHK DH PARK/DH RYU	
	APPD JS LIM	
SPEC:	AUTH CN366761	150 SHEETS
FINISH:		SHEET 16

ALL DIMENSIONS METRIC

DRAFTED IN ACCORDANCE WITH OTIS DOCUMENT 52847

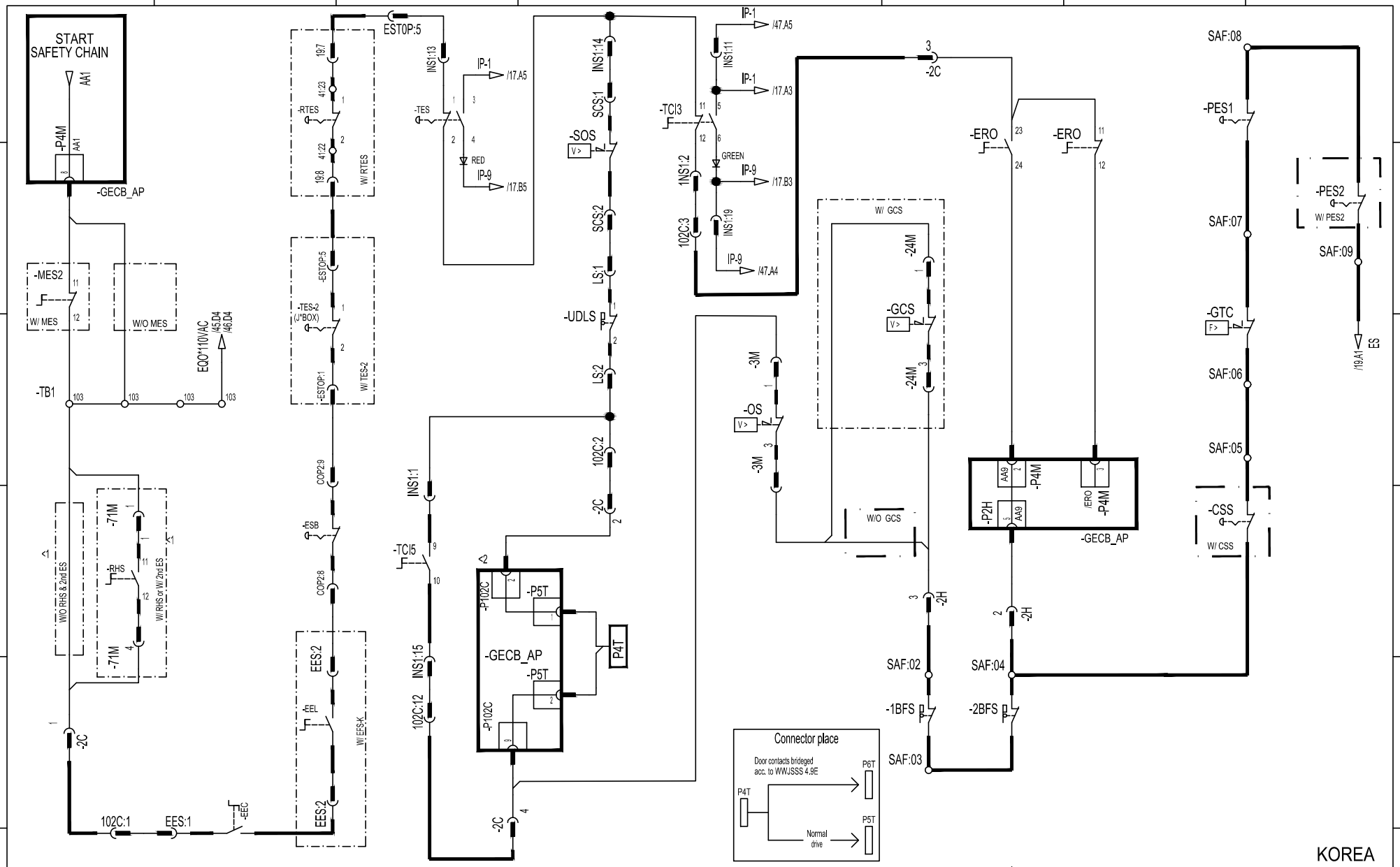

CHANGES		
2013-1-09	<2 Add P4T, Change TCI 5 as standard;	Minjie Pan CN374544

WARNING

THIS WORK AND THE INFORMATION IT CONTAINS ARE THE PROPERTY OF OTIS ELEVATOR COMPANY ("OTIS"). IT IS BEQUEATHED TO OTHERS ON THE EXPRESS CONDITION THAT IT WILL BE USED ONLY FOR OR ON BEHALF OF OTIS THAT NEITHER IT NOR THE INFORMATION IT CONTAINS WILL BE REPRODUCED OR DISCLOSED, IN WHOLE OR IN PART, WITHOUT THE PRIOR WRITTEN CONSENT OF OTIS, AND THAT ON DEMAND IT AND ANY COPIES WILL BE PROMPTLY RETURNED TO OTIS.

UNPUBLISHED WORK ©2011 ELEVATOR COMPANY
ALL RIGHTS RESERVED.

Otis
A United Technologies Company

Wiring Diagram
ACD4-MR

MATERIAL:

SPEC:

FINISH:

DWG	KAA21311AAF
	OTIS ENGINEERING CENTER SHANGHAI
DRAWN	JS YUN
CHK	DH PARK/DH RYU
APPD	JS LIM
AUTH	CN366761
ORIGINAL DATE	2014-04-08
SHEETS	150
SHEET	17

ALL DIMENSIONS METRIC

DRAFTED IN ACCORDANCE WITH OTIS DOCUMENT 52847

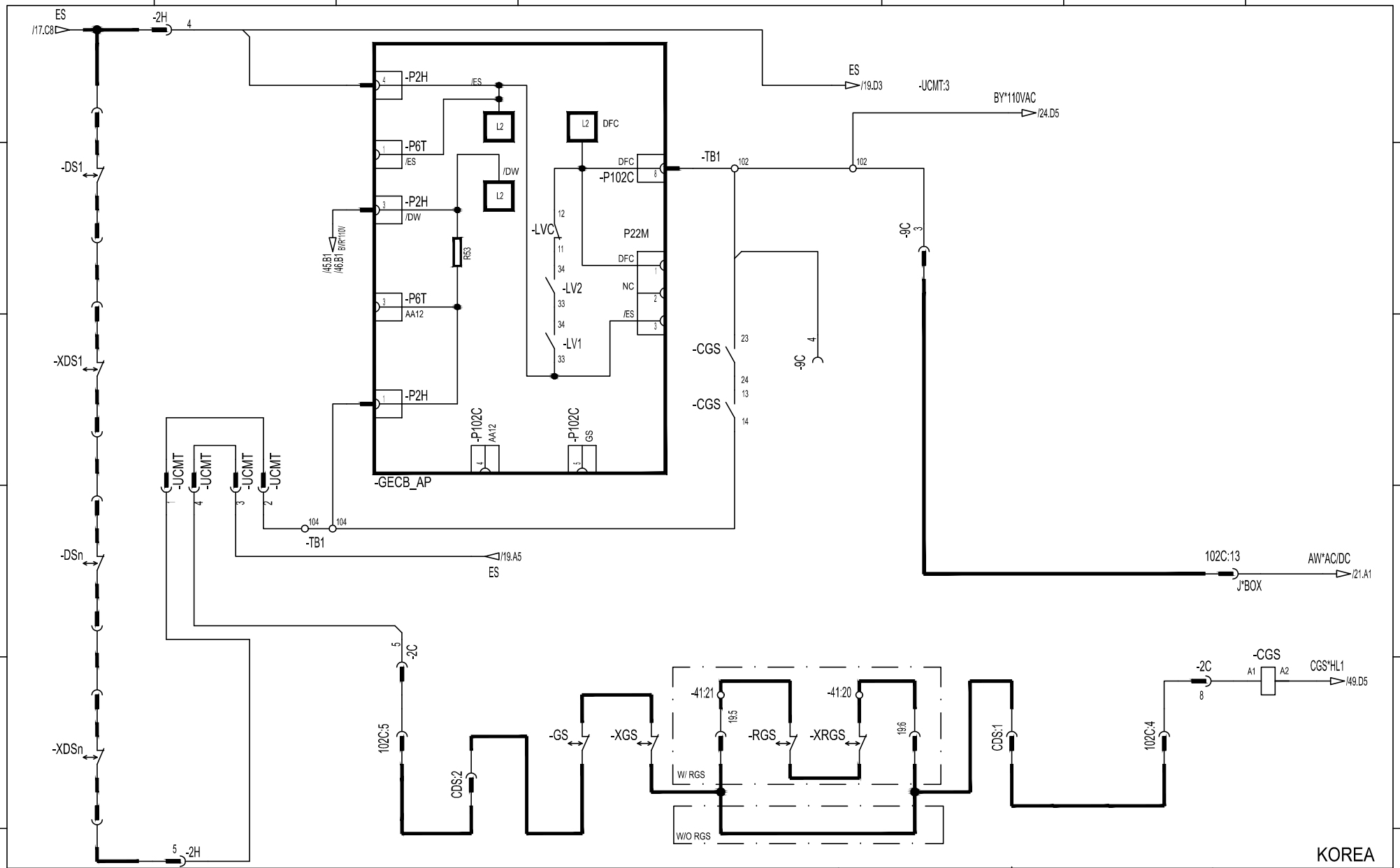

KOREA

CHANGES

WARNING

THIS WORK AND THE INFORMATION IT CONTAINS ARE THE PROPERTY OF OTIS ELEVATOR COMPANY ("OTIS"). IT IS BEQUEATHED TO OTHERS ON THE EXPRESS CONDITION THAT IT WILL BE USED ONLY FOR OR ON BEHALF OF OTIS THAT NEITHER IT NOR THE INFORMATION IT CONTAINS WILL BE REPRODUCED OR DISCLOSED, IN WHOLE OR IN PART, WITHOUT THE PRIOR WRITTEN CONSENT OF OTIS AND THAT ON DEMAND IT AND ANY COPIES WILL BE PROMPTLY RETURNED TO OTIS.

UNPUBLISHED WORK ©2011 ELEVATOR COMPANY
ALL RIGHTS RESERVED.

Otis
A United Technologies Company

Wiring Diagram
ACD4-MR

MATERIAL:

SPEC:

FINISH:

DWG KAA21311AAF

OTIS ENGINEERING CENTER
SHANGHAI

DRAWN JS YUN
CHK DH PARK/DH RYU
APPD JS LIM
AUTH CN366761

ORIGINAL DATE
2014-04-08

150 SHEETS
SHEET 19

ALL DIMENSIONS METRIC

DRAFTED IN ACCORDANCE WITH OTIS DOCUMENT 52847

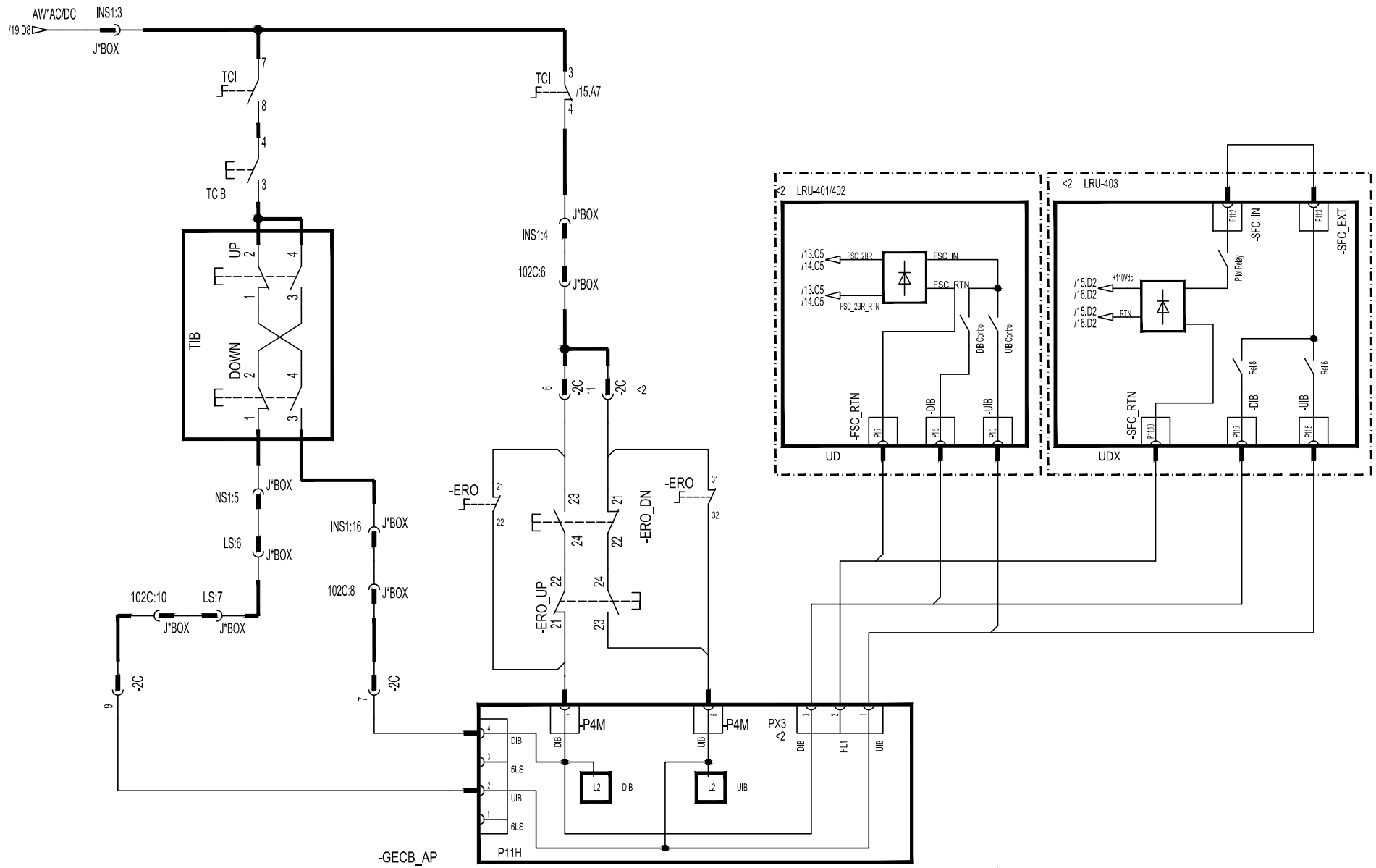

CHANGES

2013-1-09 <2 Update PX3 connector;Add TCI4 switch, Add 2C/11;
<2 Add UD401/402/403 internal wiring diagram; Minjie Pan CN374544

WARNING
THIS WORK AND THE INFORMATION IT CONTAINS ARE THE PROPERTY OF OTIS ELEVATOR COMPANY ("OTIS"). IT IS BEQUEATHED TO OTHERS ON THE EXPRESS CONDITION THAT IT WILL BE USED ONLY FOR OR ON BEHALF OF OTIS THAT NEITHER IT NOR THE INFORMATION IT CONTAINS WILL BE REPRODUCED OR DISCLOSED, IN WHOLE OR IN PART, WITHOUT THE PRIOR WRITTEN CONSENT OF OTIS, AND THAT ON DEMAND IT AND ANY COPIES WILL BE PROMPTLY RETURNED TO OTIS.
UNPUBLISHED WORK © ELEVATOR COMPANY
ALL RIGHTS RESERVED.

Otis
A United Technologies Company

Wiring Diagram
ACD4-MR

MATERIAL:
SPEC:
FINISH:

DWG DAA21310BH
OTIS ENGINEERING CENTER
SHANGHAI

DRAWN	Schiller Su	ORIGINAL DATE
CHK	Alvis Chen	2012-12-15
APPD	Ni Xiaoping	
AUTH	CN366761	150 SHEETS
		SHEET 21

ALL DIMENSIONS METRIC

DRAFTED IN ACCORDANCE WITH OTIS DOCUMENT 52847

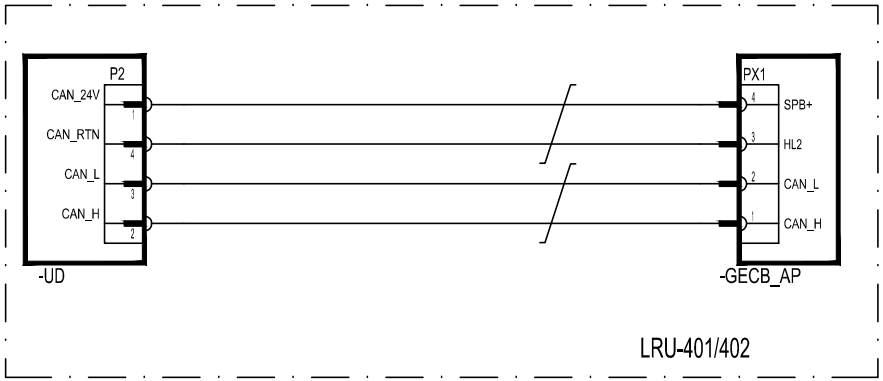

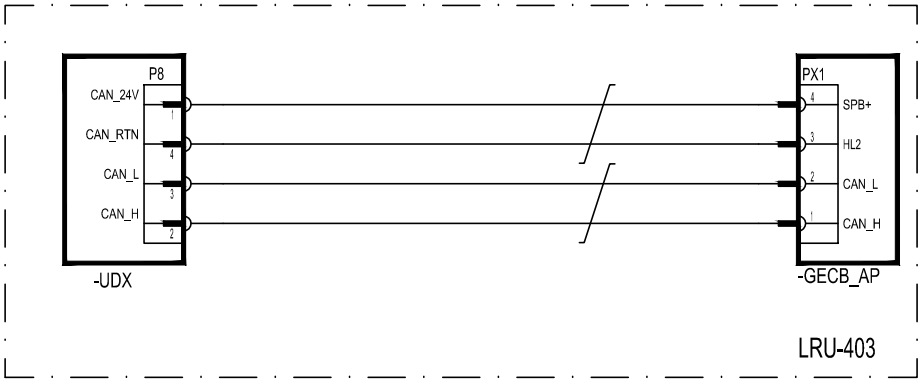

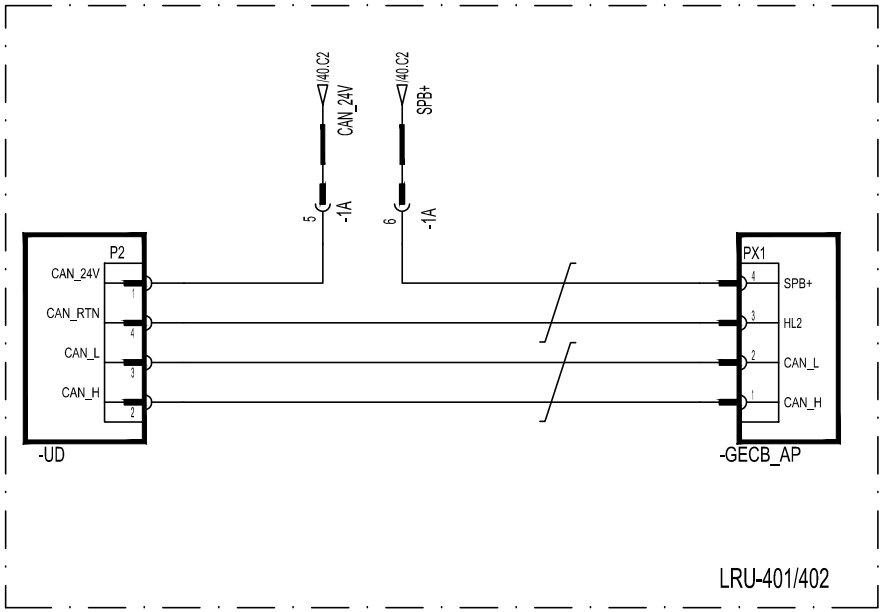

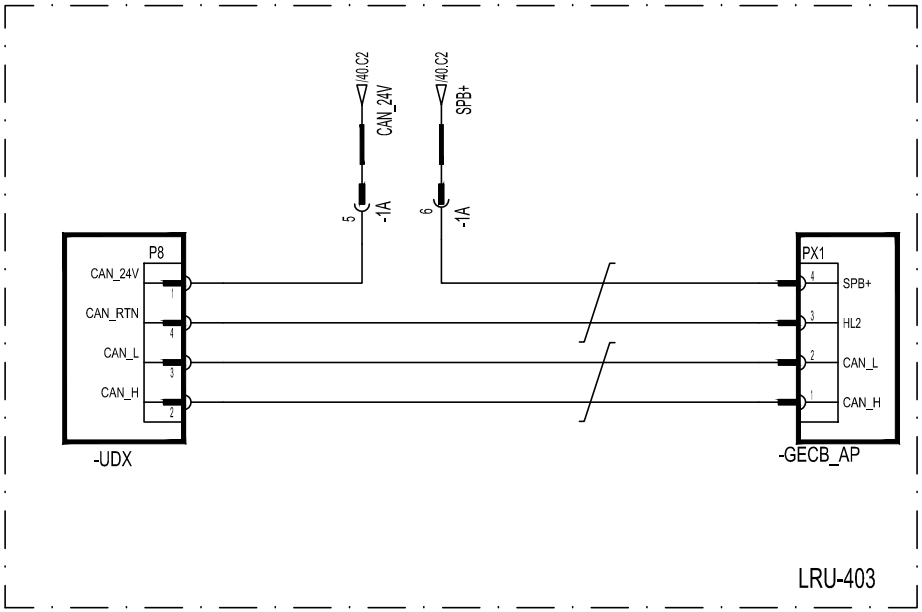

W/O ARO

CHANGES

WARNING
THIS WORK AND THE INFORMATION IT CONTAINS ARE THE PROPERTY OF OTIS ELEVATOR COMPANY. COPIES OF IS SUPPLIED TO OTHERS ON THE EXPRESS CONDITION THAT IT WILL BE USED ONLY FOR OR ON BEHALF OF OTIS THAT REFFER IT NOR THE INFORMATION IT CONTAINS WILL BE REPRODUCED OR DISCLOSED, IN WHOLE OR IN PART WITHOUT THE PRIOR WRITTEN CONSENT OF OTIS, AND THAT ON DEMAND IT AND ANY COPIES WILL BE PROMPTLY RETURNED TO OTIS.
UNPUBLISHED WORK ©2011 ELEVATOR COMPANY
ALL RIGHTS RESERVED.

Otis
A United Technologies Company

Wiring Diagram
ACD4-MR

MATERIAL:

SPEC:

FINISH:

DWG KAA21311AAF

OTIS ENGINEERING CENTER
SHANGHAI

DRAWN	JS YUN	ORIGINAL DATE
CHK	DH PARK/DH RYU	2014-04-08
APPD	JS LIM	
AUTH	CN366761	63 SHEETS
		SHEET 22

ALL DIMENSIONS METRIC

DRAFTED IN ACCORDANCE WITH OTIS DOCUMENT 52847

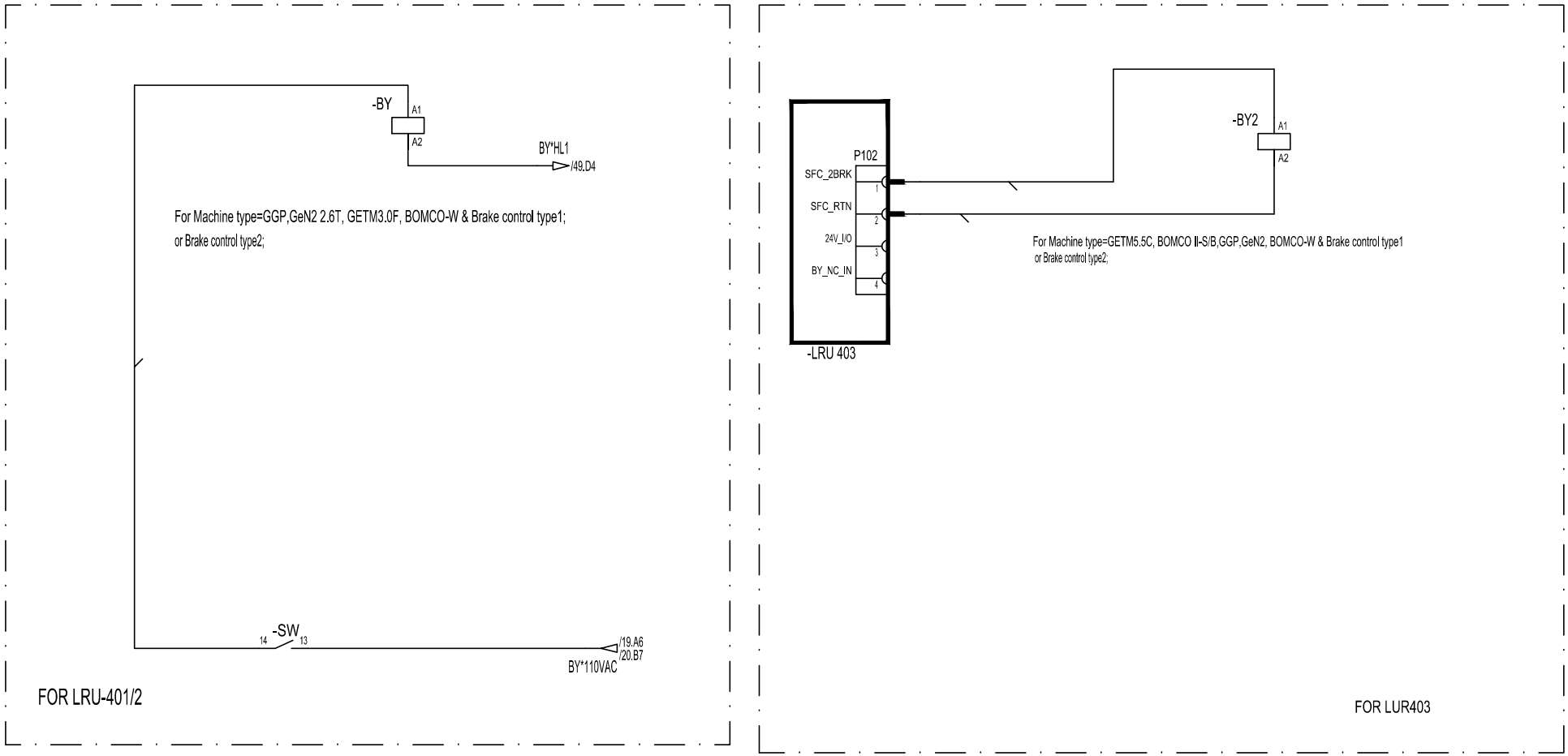

CHANGES		
2013-1-09	<2 Delete BY1 & BY2 control solution;	Minjie Pan CN374544

WARNING
THIS WORK AND THE INFORMATION IT CONTAINS ARE THE PROPERTY OF OTIS ELEVATOR COMPANY ("OTIS"). IT IS DELIVERED TO OTHERS ON THE EXPRESS CONDITION THAT IT WILL BE USED ONLY FOR OR ON BEHALF OF OTIS THAT NEITHER IT NOR THE INFORMATION IT CONTAINS WILL BE REPRODUCED OR DISCLOSED, IN WHOLE OR IN PART, WITHOUT THE PRIOR WRITTEN CONSENT OF OTIS, AND THAT ON DEMAND IT AND ANY COPIES WILL BE PROMPTLY RETURNED TO OTIS.
UNPUBLISHED WORK © ELEVATOR COMPANY
ALL RIGHTS RESERVED.

Otis
A United Technologies Company

Wiring Diagram
ACD4-MR

MATERIAL:
SPEC:
FINISH:

DWG	KAA21311AAF	
OTIS ENGINEERING CENTER SHANGHAI		
DRAWN	JS YUN	ORIGINAL DATE 2014-04-08
CHK	DH PARK/DH RYU	
APPD	JS LIM	
AUTH	CN366761	150 SHEETS
		SHEET 24

ALL DIMENSIONS METRIC

DRAFTED IN ACCORDANCE WITH OTIS DOCUMENT 52847

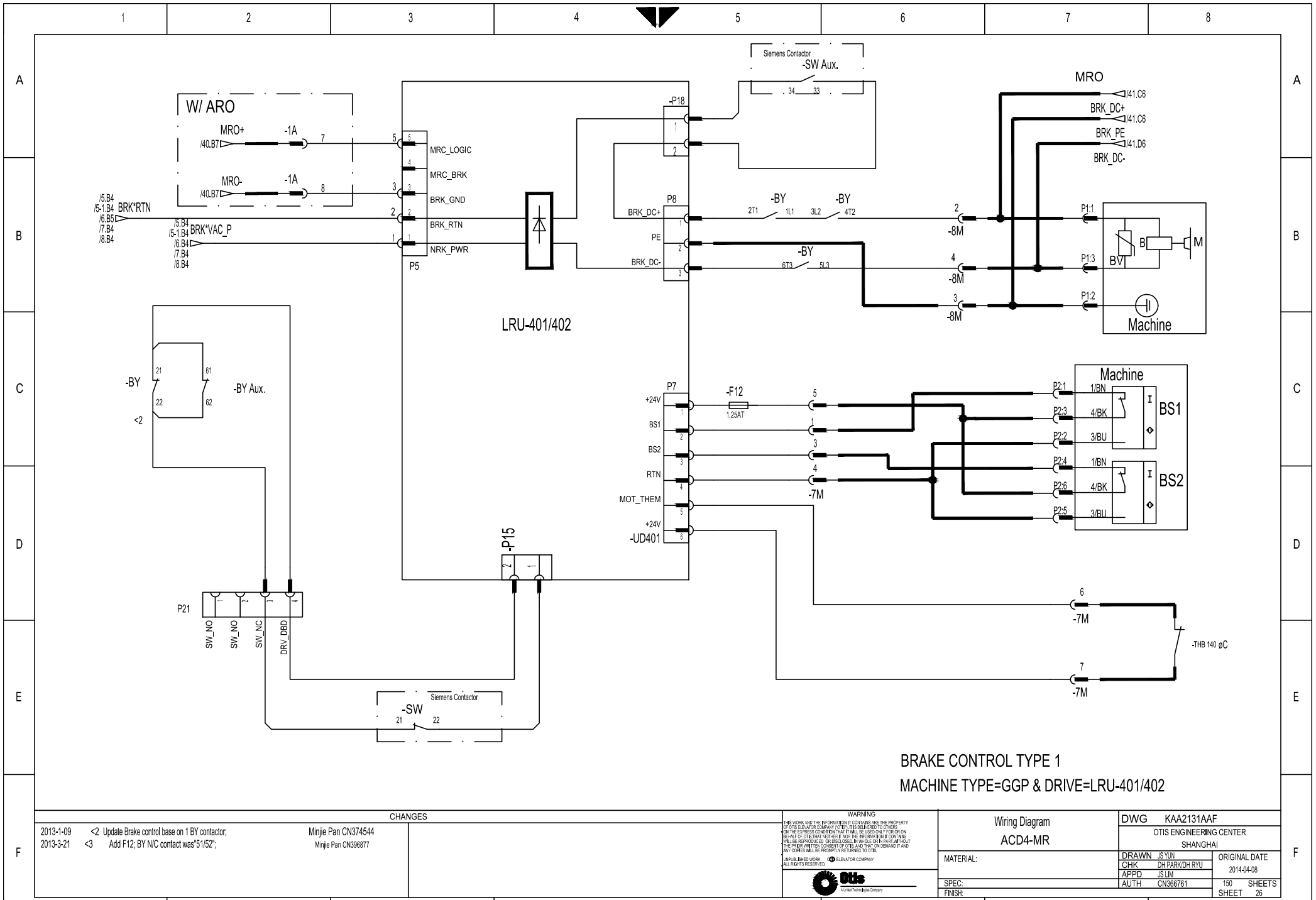

CHANGES

2013-1-09	<2 Update Brake control base on 1 BY contactor;	Minjie Pan CN374544
2013-3-21	<3 Add F12; BY N/C contact was"51/52";	Minjie Pan CN396877

WARNING
THIS WORK AND THE INFORMATION IT CONTAINS ARE THE PROPERTY OF OTIS ELEVATOR COMPANY ("OTIS"). IT IS BELIEVED TO OTHERS ON THE EXPRESS CONDITION THAT IT WILL BE USED ONLY FOR OR ON BEHALF OF OTIS THAT NEITHER IT NOR THE INFORMATION IT CONTAINS WILL BE REPRODUCED OR DISCLOSED, IN WHOLE OR IN PART, WITHOUT THE PRIOR WRITTEN CONSENT OF OTIS AND THAT ON DEMAND IT AND ANY COPIES WILL BE PROMPTLY RETURNED TO OTIS.
UNPUBLISHED WORK © ELEVATOR COMPANY
ALL RIGHTS RESERVED.

Otis
A United Technologies Company

Wiring Diagram
ACD4-MR

MATERIAL:
SPEC:
FINISH:

DWG KAA2131AAF
OTIS ENGINEERING CENTER
SHANGHAI

DRAWN JS YUN
CHK DH PARK/DH RYU
APPD JS LIM
AUTH CN366761

ORIGINAL DATE
2014-04-08

150 SHEETS
SHEET 26

ALL DIMENSIONS METRIC

DRAFTED IN ACCORDANCE WITH OTIS DOCUMENT 52847

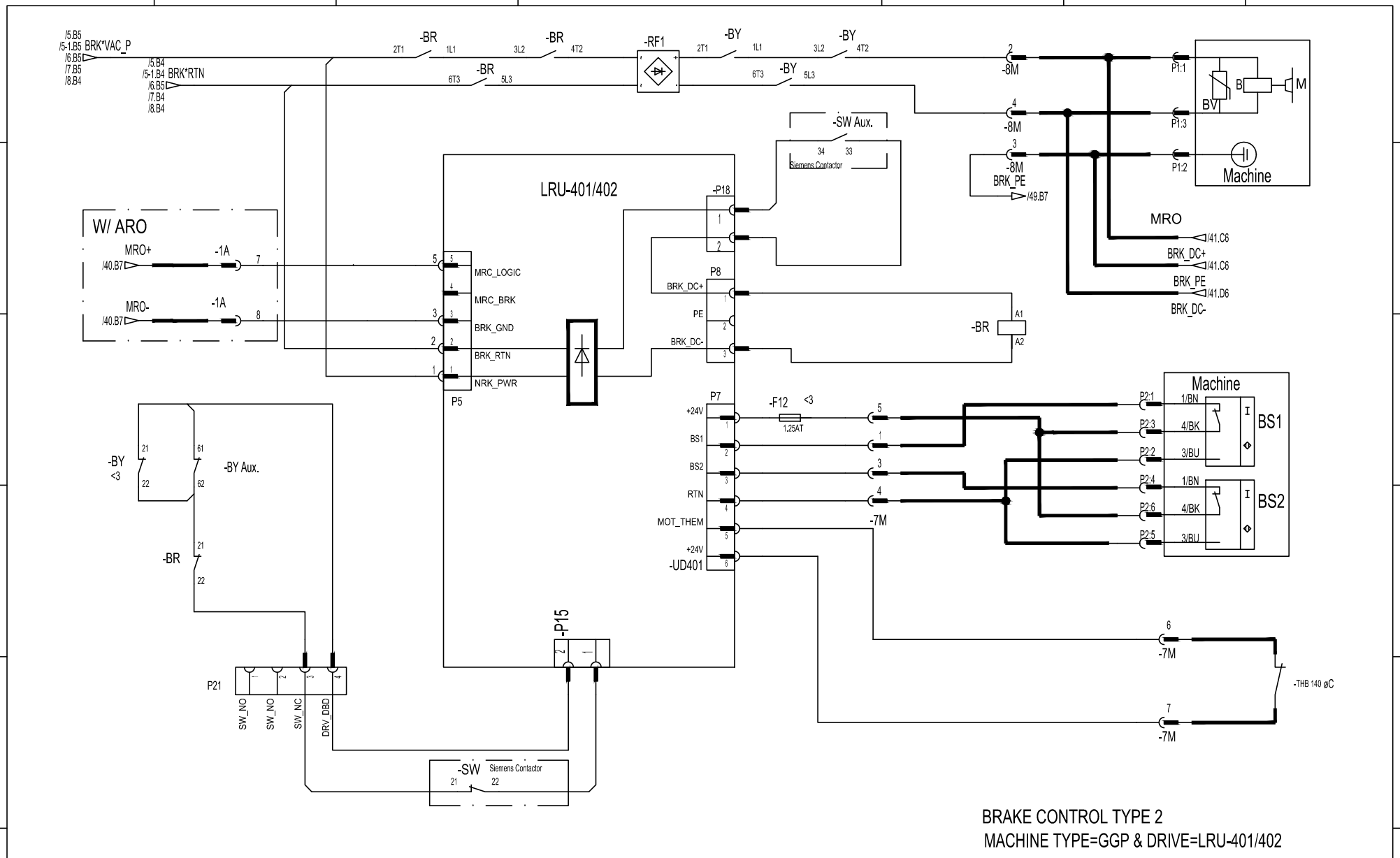

BRAKE CONTROL TYPE 2

MACHINE TYPE=GGP & DRIVE=LRU-401/402

CHANGES		
2013-3-21 <3	Add F12; BY N/C contact was"51/52";	Minjie Pan CN396877

WARNING
THIS WORK AND THE INFORMATION IT CONTAINS ARE THE PROPERTY OF OTIS ELEVATOR COMPANY ("OTIS"). IT IS SUBMITTED TO OTHERS ON THE EXPRESS CONDITION THAT IT WILL BE USED ONLY FOR OR ON BEHALF OF OTIS THAT NEITHER IT NOR THE INFORMATION IT CONTAINS WILL BE REPRODUCED OR DISCLOSED, IN WHOLE OR IN PART, WITHOUT THE PRIOR WRITTEN CONSENT OF OTIS, AND THAT ON DEMAND IT AND ANY COPIES WILL BE PROMPTLY RETURNED TO OTIS.
UNPUBLISHED WORK ©2011 ELEVATOR COMPANY
ALL RIGHTS RESERVED.

Otis
A United Technologies Company

Wiring Diagram ACD4-MR	DWG KAA21311AAF	
	OTIS ENGINEERING CENTER SHANGHAI	
MATERIAL:	DRAWN JS YUN	ORIGINAL DATE 2014-04-08
	CHK DH PARK/DH RYU	
	APPD JS LIM	
SPEC:	AUTH CN366761	150 SHEETS
FINISH:		SHEET 27

ALL DIMENSIONS METRIC

DRAFTED IN ACCORDANCE WITH OTIS DOCUMENT 52847

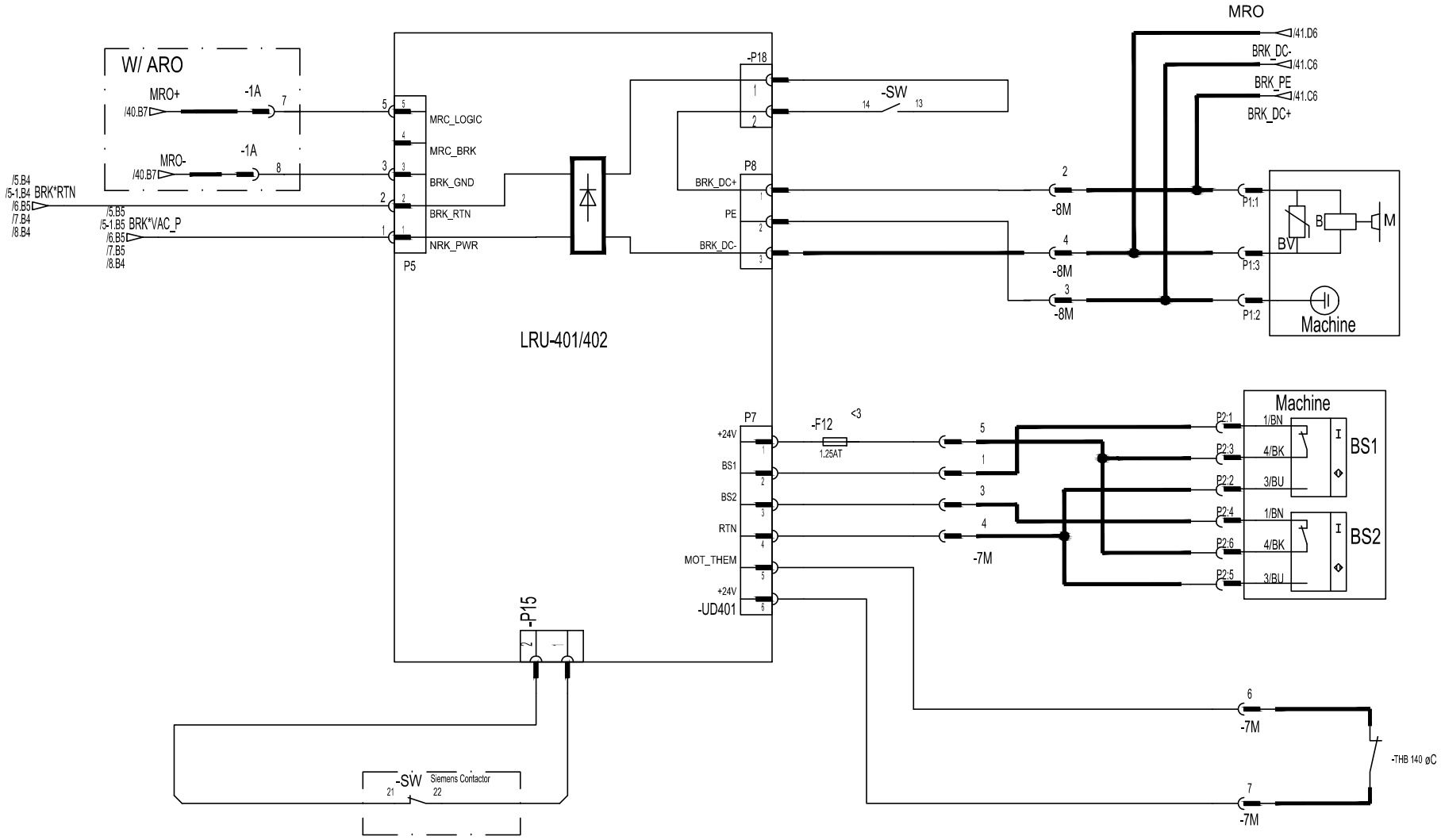

BRAKE CONTROL TYPE 3

MACHINE TYPE=GGP & DRIVE=LRU-401/402

CHANGES		
2013-3-21	<3	Add F12; Minjie Pan CN396877

WARNING
THIS WORK AND THE INFORMATION IT CONTAINS ARE THE PROPERTY OF OTIS ELEVATOR COMPANY ("OTIS"). IT IS SUPPLIED TO OTHERS ON THE EXPRESS CONDITION THAT IT WILL BE USED ONLY FOR OR ON BEHALF OF OTIS THAT NEITHER IT NOR THE INFORMATION IT CONTAINS WILL BE REPRODUCED OR DISCLOSED, IN WHOLE OR IN PART, WITHOUT THE PRIOR WRITTEN CONSENT OF OTIS, AND THAT ON DEMAND IT AND ANY COPIES WILL BE PROMPTLY RETURNED TO OTIS.
UNPUBLISHED WORK ©2011 ELEVATOR COMPANY
ALL RIGHTS RESERVED.

Otis
A United Technologies Company

Wiring Diagram
ACD4-MR

MATERIAL:

SPEC:

FINISH:

DWG KAA21311AAF

OTIS ENGINEERING CENTER
SHANGHAI

DRAWN	JS YUN	ORIGINAL DATE
CHK	DH PARK/DH RYU	2014-04-08
APPD	JS LIM	
AUTH	CN366761	150 SHEETS
		SHEET 28

ALL DIMENSIONS METRIC

DRAFTED IN ACCORDANCE WITH OTIS DOCUMENT 52847

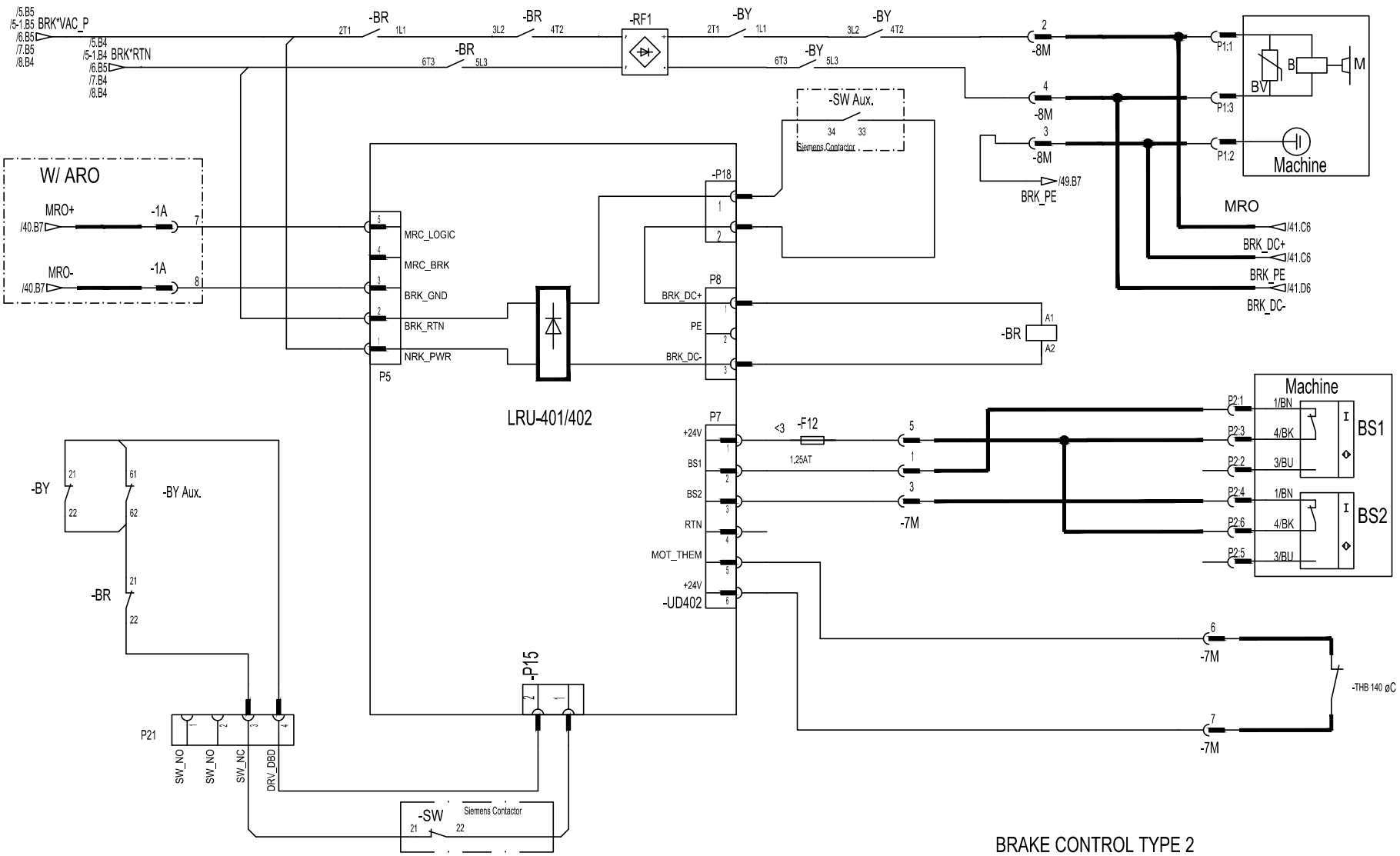

BRAKE CONTROL TYPE 2

MACHINE TYPE=GeN2 2.6T & DRIVE=LRU-401/402

CHANGES

2013-3-21	<3	Add F12; BY N/C contact was"51/52";	Minjie Pan CN396877

WARNING
THIS WORK AND THE INFORMATION IT CONTAINS ARE THE PROPERTY OF OTIS ELEVATOR COMPANY ("OTIS"). IT IS SUBMITTED TO OTHERS ON THE EXPRESS CONDITION THAT IT WILL BE USED ONLY FOR OR ON BEHALF OF OTIS THAT NEITHER IT NOR THE INFORMATION IT CONTAINS WILL BE REPRODUCED OR DISCLOSED, IN WHOLE OR IN PART, WITHOUT THE PRIOR WRITTEN CONSENT OF OTIS, AND THAT ON DEMAND IT AND ANY COPIES WILL BE PROMPTLY RETURNED TO OTIS.
UNPUBLISHED WORK ©2011 ELEVATOR COMPANY
ALL RIGHTS RESERVED.

Otis
A United Technologies Company

Wiring Diagram
ACD4-MR

MATERIAL:
SPEC:
FINISH:

DWG KAA21311AAF
OTIS ENGINEERING CENTER
SHANGHAI

DRAWN	JS YUN	ORIGINAL DATE
CHK	DH PARK/DH RYU	2014-04-08
APPD	JS LIM	
AUTH	CN366761	150 SHEETS
		SHEET 29

ALL DIMENSIONS METRIC

DRAFTED IN ACCORDANCE WITH OTIS DOCUMENT 52847

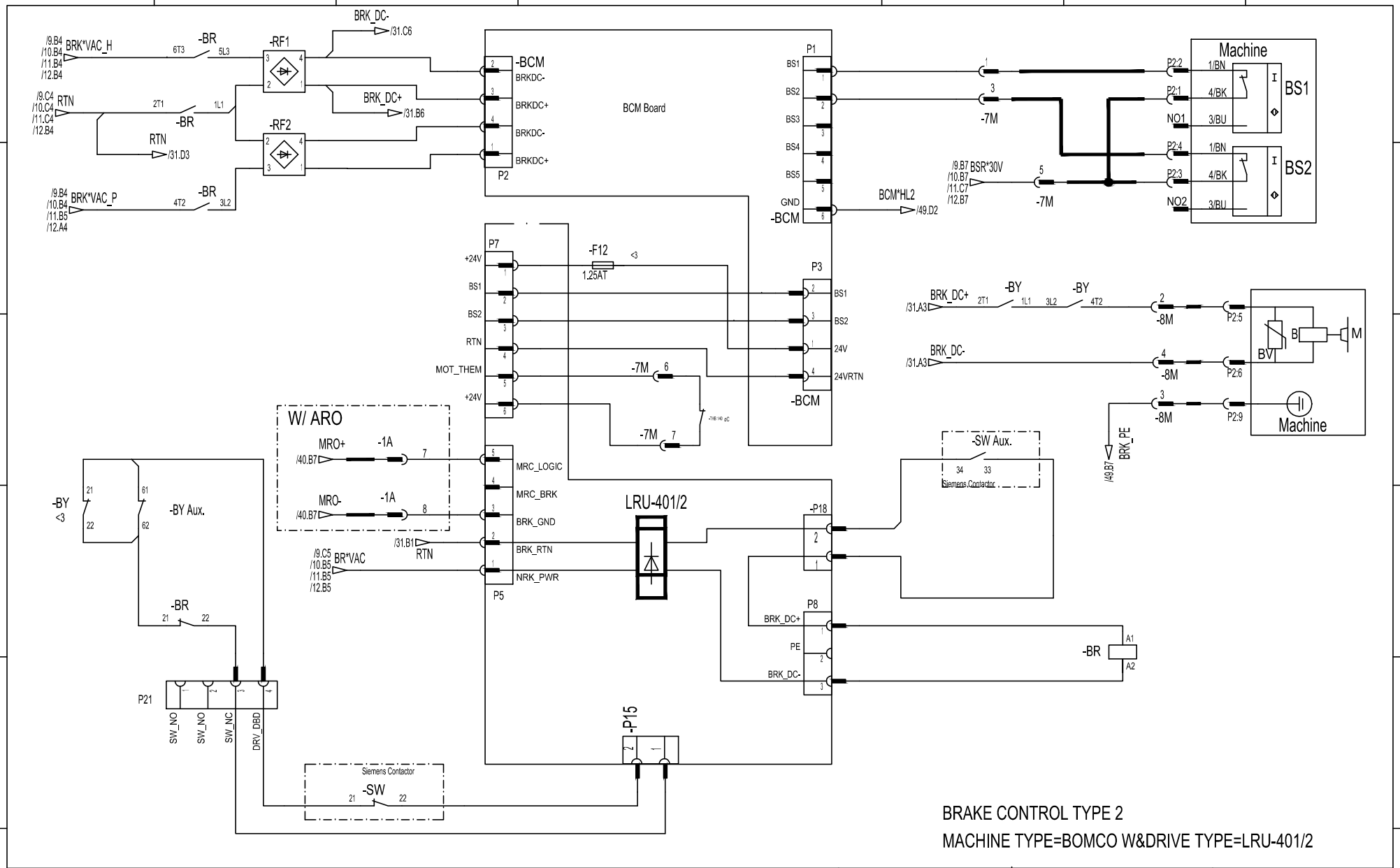

BRAKE CONTROL TYPE 2

MACHINE TYPE=BOMCO W&DRIVE TYPE=LRU-401/2

CHANGES		
2013-3-21	<3	Add F12; BY N/C contact was"51/52"; Minjie Pan CN396877

WARNING
THIS WORK AND THE INFORMATION IT CONTAINS ARE THE PROPERTY OF OTIS ELEVATOR COMPANY ("OTIS"). IT IS BELIEVED TO OTHERS ON THE EXPRESS CONDITION THAT IT WILL BE USED ONLY FOR OR ON BEHALF OF OTIS THAT NEITHER IT NOR THE INFORMATION IT CONTAINS WILL BE REPRODUCED OR DISCLOSED, IN WHOLE OR IN PART, WITHOUT THE PRIOR WRITTEN CONSENT OF OTIS, AND THAT ON DEMAND IT AND ANY COPIES WILL BE PROMPTLY RETURNED TO OTIS.
UNPUBLISHED WORK © 2013 ELEVATOR COMPANY
ALL RIGHTS RESERVED.

Otis
A United Technologies Company

Wiring Diagram
ACD4-MR

MATERIAL:
SPEC:
FINISH:

DWG KAA21311AAF
OTIS ENGINEERING CENTER
SHANGHAI

DRAWN	JS YUN	ORIGINAL DATE
CHK	DH PARK/DH RYU	2014-04-08
APPD	JS LIM	
AUTH	CN366761	150 SHEETS
		SHEET 31

ALL DIMENSIONS METRIC

DRAFTED IN ACCORDANCE WITH OTIS DOCUMENT 52847

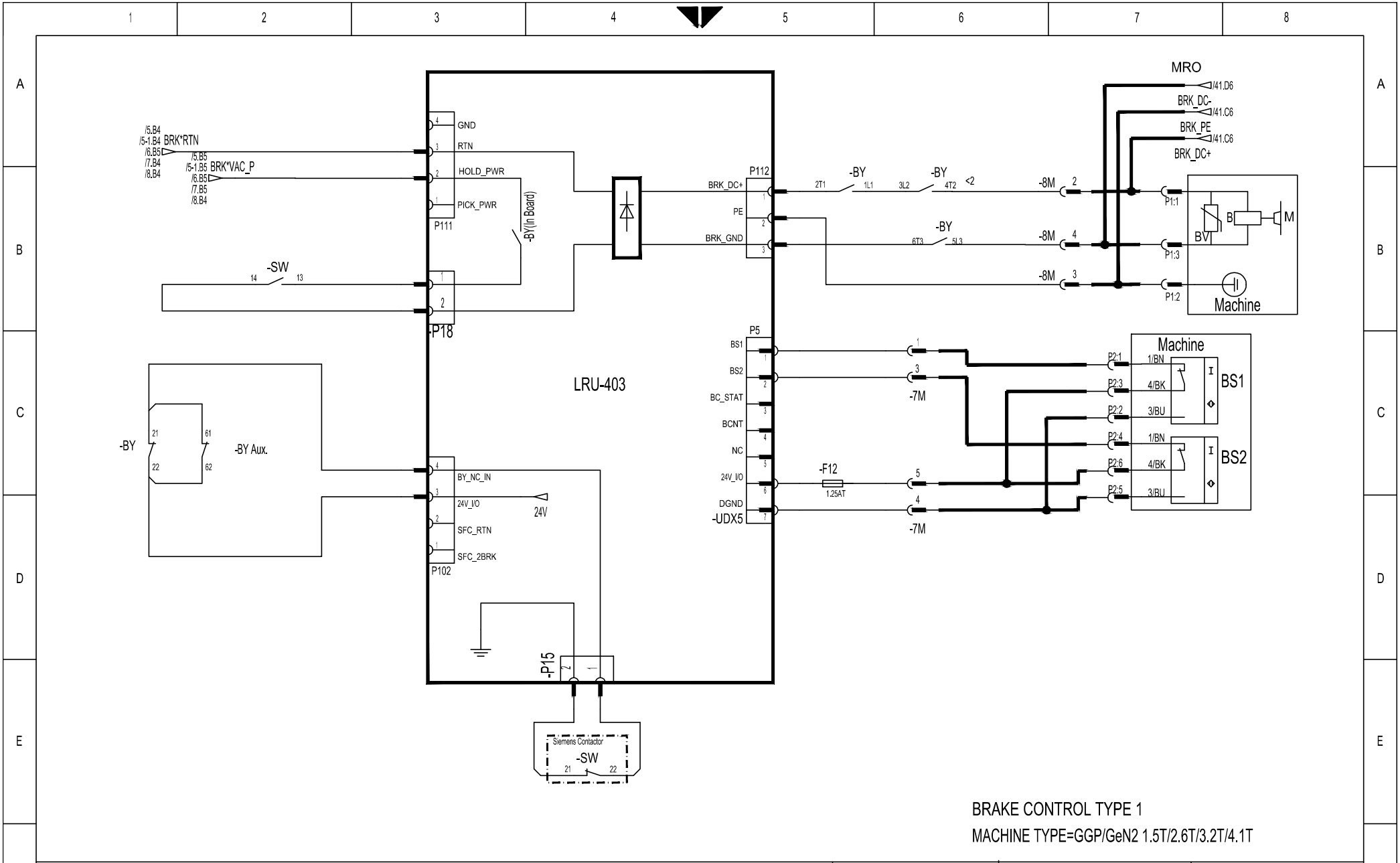

BRAKE CONTROL TYPE 1

MACHINE TYPE=GGP/GeN2 1.5T/2.6T/3.2T/4.1T

CHANGES		
2013-1-09	<2 Update Brake control base on 1 BY contactor;	Minjie Pan CN374544
2013-3-21	<3 Add F12; BY N/C contact was"51/52";	Minjie Pan CN396877

WARNING
THIS WORK AND THE INFORMATION IT CONTAINS ARE THE PROPERTY OF OTIS ELEVATOR COMPANY ("OTIS"). IT IS DELIVERED TO OTHERS ON THE EXPRESS CONDITION THAT IT WILL BE USED ONLY FOR OR ON BEHALF OF OTIS THAT NEITHER IT NOR THE INFORMATION IT CONTAINS WILL BE REPRODUCED OR DISCLOSED, IN WHOLE OR IN PART, WITHOUT THE PRIOR WRITTEN CONSENT OF OTIS, AND THAT ON DEMAND IT AND ANY COPIES WILL BE PROMPTLY RETURNED TO OTIS.
UNPUBLISHED WORK © ELEVATOR COMPANY
ALL RIGHTS RESERVED.

Otis
A United Technologies Company

Wiring Diagram
ACD4-MR

MATERIAL:

SPEC:

FINISH:

DWG KAA21311AAF

OTIS ENGINEERING CENTER
SHANGHAI

DRAWN	JS YUN	ORIGINAL DATE
CHK	DH PARK/DH RYU	2014-04-08
APPD	JS LIM	
AUTH	CN366761	150 SHEETS
		SHEET 32

ALL DIMENSIONS METRIC

DRAFTED IN ACCORDANCE WITH OTIS DOCUMENT 52847

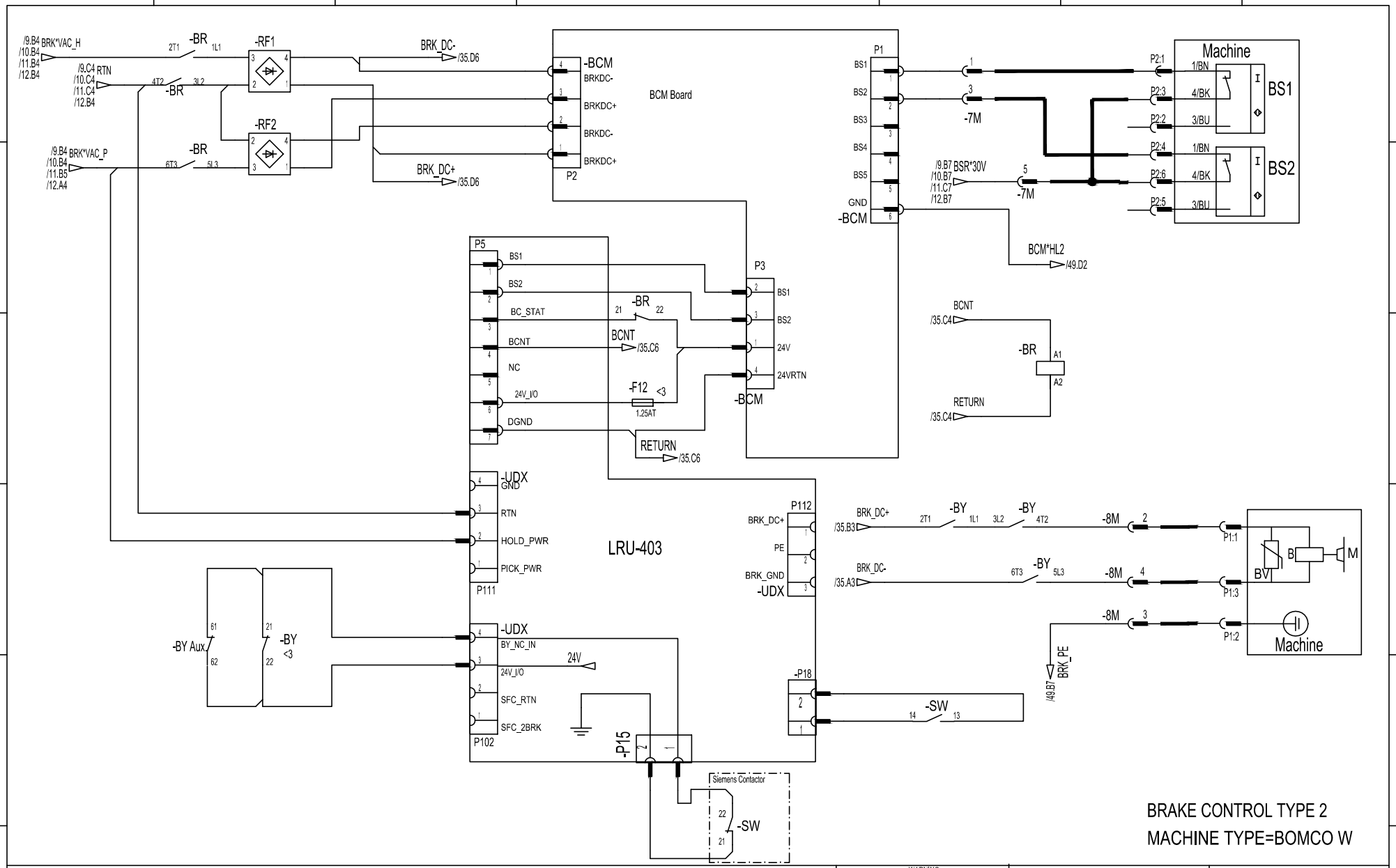

CHANGES

2013-3-21	<3	Add F12; BY N/C contact was"51/52";	Minjie Pan CN396877

WARNING
THIS WORK AND THE INFORMATION IT CONTAINS ARE THE PROPERTY OF OTIS ELEVATOR COMPANY ("OTIS"). IT IS BELIEVED TO OTHERS ON THE EXPRESS CONDITION THAT IT WILL BE USED ONLY FOR OR ON BEHALF OF OTIS THAT NEITHER IT NOR THE INFORMATION IT CONTAINS WILL BE REPRODUCED OR DISCLOSED, IN WHOLE OR IN PART, WITHOUT THE PRIOR WRITTEN CONSENT OF OTIS, AND THAT ON DEMAND IT AND ANY COPIES WILL BE PROMPTLY RETURNED TO OTIS.
UNPUBLISHED WORK © ELEVATOR COMPANY
ALL RIGHTS RESERVED.

Otis
A United Technologies Company

Wiring Diagram
ACD4-MR

MATERIAL:
SPEC:
FINISH:

DWG	KAA21311AAF
	OTIS ENGINEERING CENTER SHANGHAI
DRAWN	JS YUN
CHK	DH PARK/DH RYU
APPD	JS LIM
AUTH	CN366761
ORIGINAL DATE	2014-04-08
SHEETS	150
SHEET	35

ALL DIMENSIONS METRIC

DRAFTED IN ACCORDANCE WITH OTIS DOCUMENT 52847

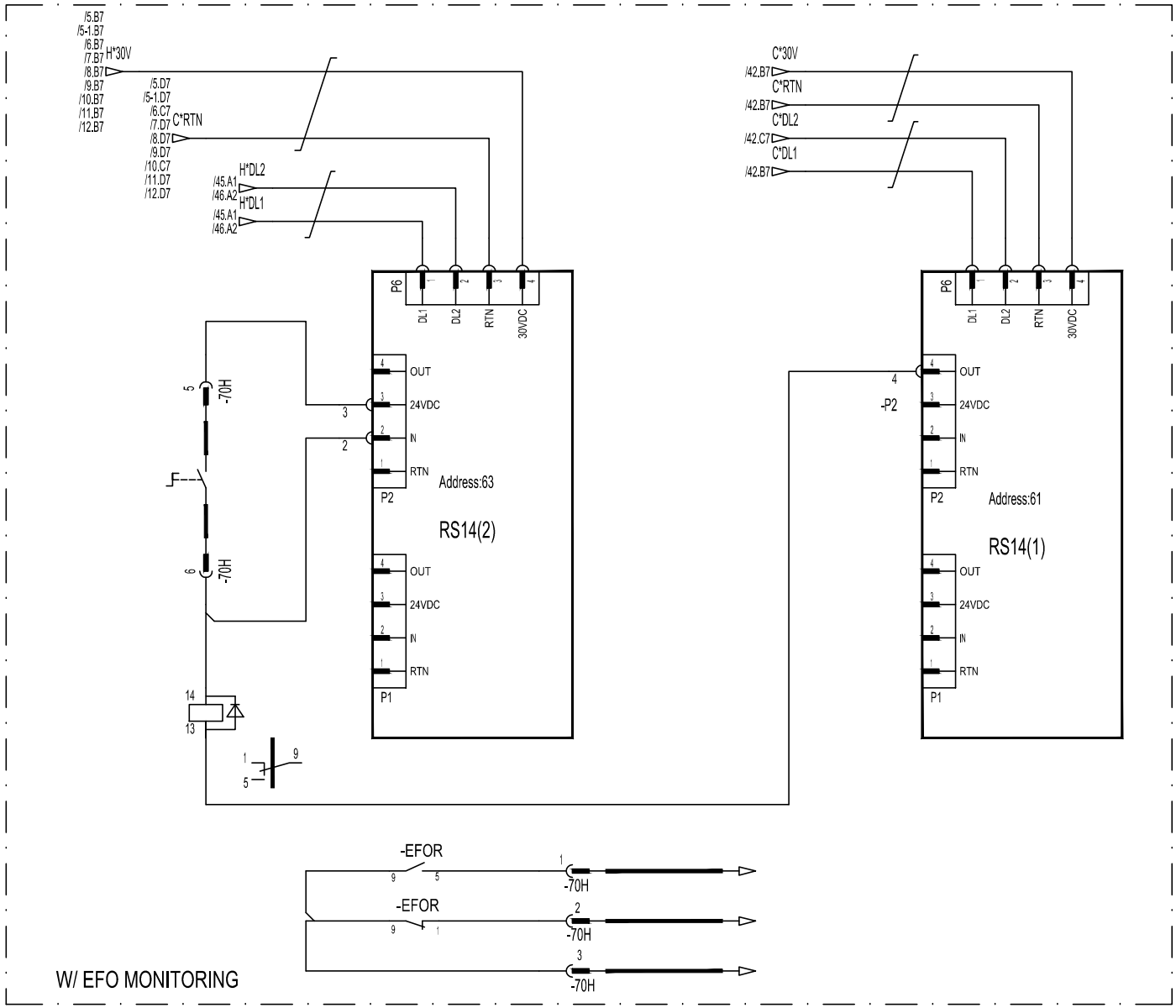

CHANGES

WARNING
THIS WORK AND THE INFORMATION IT CONTAINS ARE THE PROPERTY OF OTIS ELEVATOR COMPANY ("OTIS"). IT IS DELIVERED TO OTHERS ON THE EXPRESS CONDITION THAT IT WILL BE USED ONLY FOR OR ON BEHALF OF OTIS THAT NEITHER IT NOR THE INFORMATION IT CONTAINS WILL BE REPRODUCED OR DISCLOSED, IN WHOLE OR IN PART, WITHOUT THE PRIOR WRITTEN CONSENT OF OTIS, AND THAT ON DEMAND IT AND ANY COPIES WILL BE PROMPTLY RETURNED TO OTIS.
UNPUBLISHED WORK © ELEVATOR COMPANY
ALL RIGHTS RESERVED.

Otis
A United Technologies Company

Wiring Diagram
ACD4-MR

MATERIAL:
SPEC:
FINISH:

DWG KAA21311AAF
OTIS ENGINEERING CENTER
SHANGHAI

DRAWN	JS YUN	ORIGINAL DATE
CHK	DH PARK/DH RYU	2014-04-08
APPD	JS LIM	
AUTH	CN366761	150 SHEETS
		SHEET 39

ALL DIMENSIONS METRIC

DRAFTED IN ACCORDANCE WITH OTIS DOCUMENT 52847

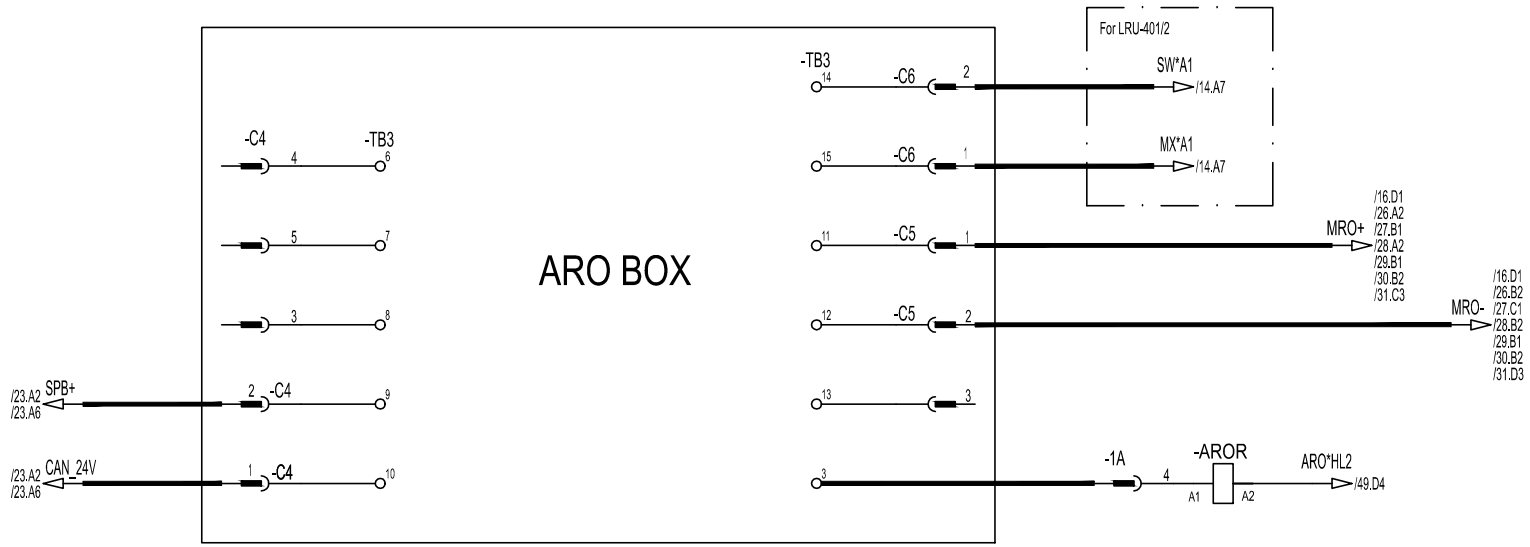

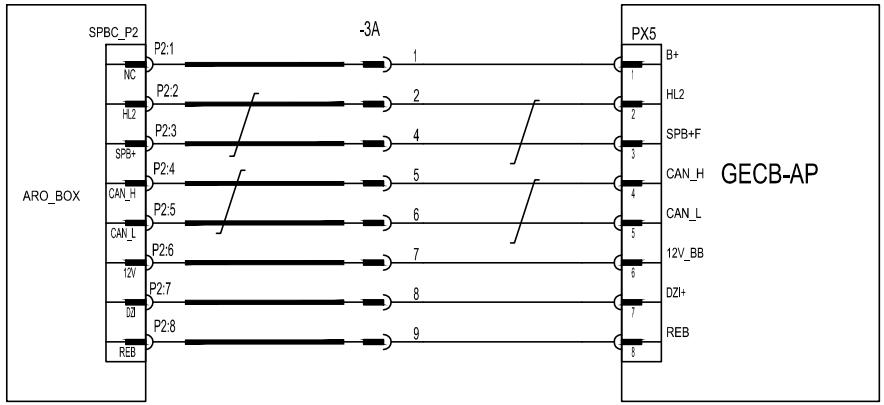

<2 Note: ARO Box detail internal wiring diagram , please see sheet 40-1,40-2,40-3,40-4;

CHANGES

2013-1-11	<1 Update AROR relay circuit;	Minjie Pan CN375251
2013-1-09	<2 Add Note;	Minjie Pan CN374544

WARNING
THIS WORK AND THE INFORMATION IT CONTAINS ARE THE PROPERTY OF OTIS ELEVATOR COMPANY ("OTIS"). IT IS DELIVERED TO OTHERS ON THE EXPRESS CONDITION THAT IT WILL BE USED ONLY FOR OR ON BEHALF OF OTIS THAT NEITHER IT NOR THE INFORMATION IT CONTAINS WILL BE REPRODUCED OR DISCLOSED, IN WHOLE OR IN PART, WITHOUT THE PRIOR WRITTEN CONSENT OF OTIS, AND THAT ON DEMAND IT AND ANY COPIES WILL BE PROMPTLY RETURNED TO OTIS.
UNPUBLISHED WORK ©2011 ELEVATOR COMPANY
ALL RIGHTS RESERVED.

Otis
A United Technologies Company

Wiring Diagram
ACD4-MR

MATERIAL:
SPEC:
FINISH:

DWG	KAA21311AAF	
OTIS ENGINEERING CENTER SHANGHAI		
DRAWN	JS YUN	ORIGINAL DATE 2014-04-08
CHK	DH PARK/DH RYU	
APPD	JS LIM	
AUTH	CN366761	150 SHEETS
		SHEET 40

ALL DIMENSIONS METRIC

DRAFTED IN ACCORDANCE WITH OTIS DOCUMENT 52847

ARO Box internal wiring diagram

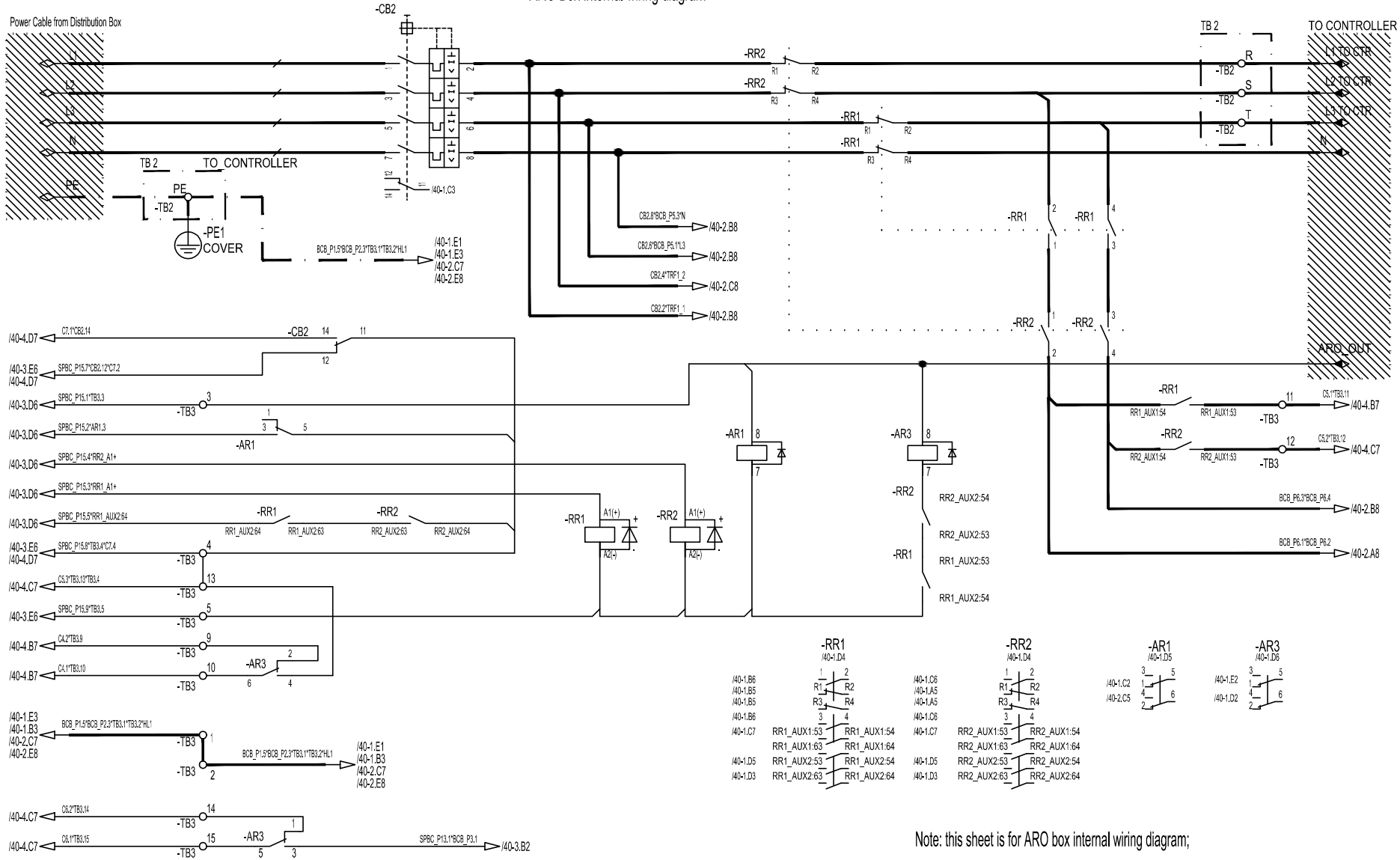

Note: this sheet is for ARO box internal wiring diagram;

CHANGES

WARNING
THIS WORK AND THE INFORMATION IT CONTAINS ARE THE PROPERTY OF OTIS ELEVATOR COMPANY ("OTIS"). IT IS BELIEVED TO OTHERS ON THE EXPRESS CONDITION THAT IT WILL BE USED ONLY FOR OR ON BEHALF OF OTIS THAT NEITHER IT NOR THE INFORMATION IT CONTAINS WILL BE REPRODUCED OR DISCLOSED, IN WHOLE OR IN PART, WITHOUT THE PRIOR WRITTEN CONSENT OF OTIS AND THAT ON DEMAND IT AND ANY COPIES WILL BE PROMPTLY RETURNED TO OTIS.
UNPUBLISHED WORK ©2011 ELEVATOR COMPANY
ALL RIGHTS RESERVED.

Otis
A United Technologies Company

Wiring Diagram
ACD4-MR

MATERIAL:
SPEC:
FINISH:

DWG KAA21311AAF
OTIS ENGINEERING CENTER
SHANGHAI

DRAWN	JS YUN	ORIGINAL DATE
CHK	DH PARK/DH RYU	2014-04-08
APPD	JS LIM	
AUTH	CN366761	150 SHEETS
		SHEET 40-1

ALL DIMENSIONS METRIC

DRAFTED IN ACCORDANCE WITH OTIS DOCUMENT 52847

ARO Box internal wiring diagram

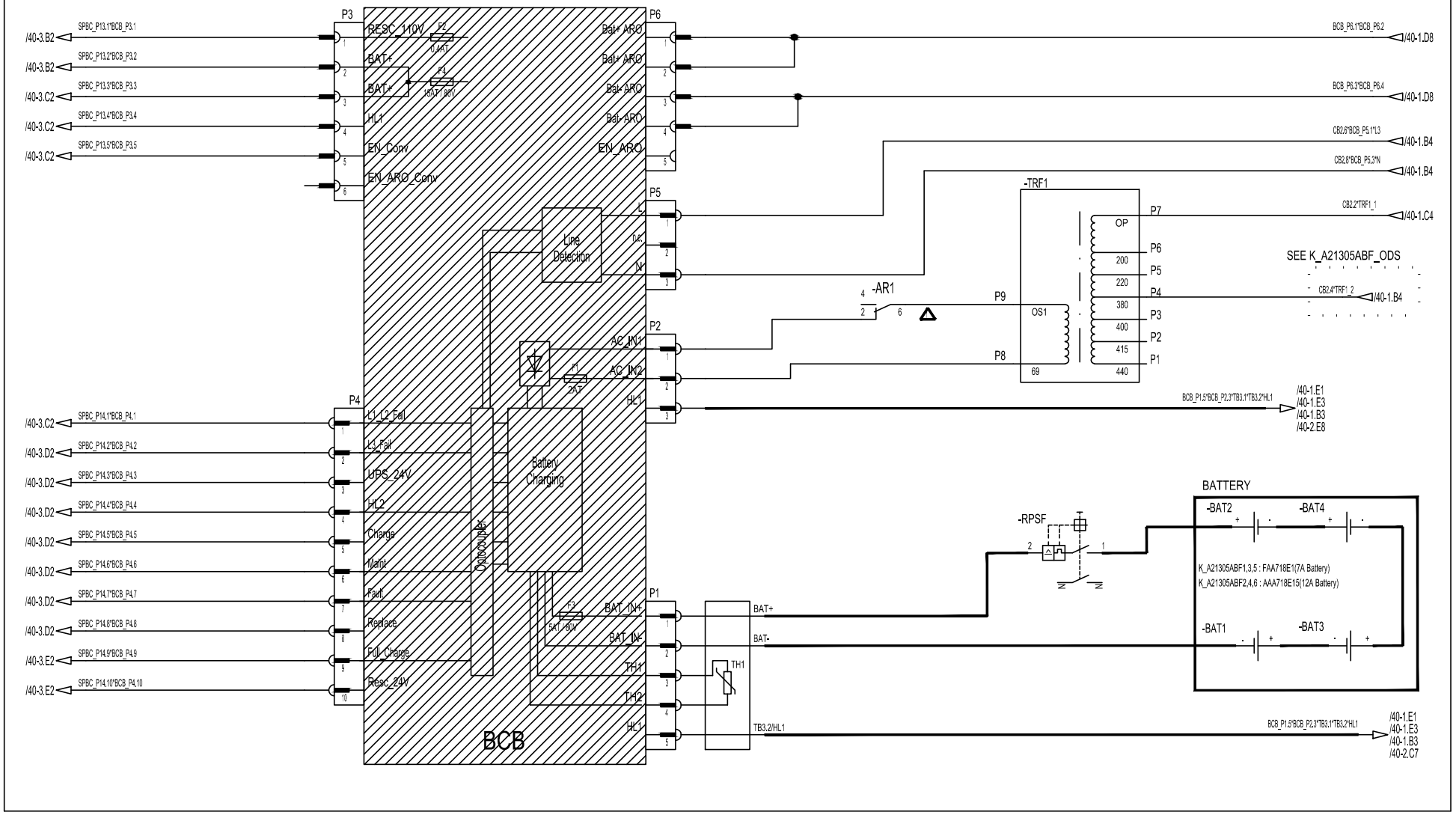

Note: this sheet is for ARO box internal wiring diagram;

CHANGES	WARNING	Wiring Diagram ACD4-MR	DWG KAA21311AAF
	THIS WORK AND THE INFORMATION IT CONTAINS ARE THE PROPERTY OF OTIS ELEVATOR COMPANY ("OTIS"). IT IS DELIVERED TO OTHERS ON THE EXPRESS CONDITION THAT IT WILL BE USED ONLY FOR OR ON BEHALF OF OTIS THAT NEITHER IT NOR THE INFORMATION IT CONTAINS WILL BE REPRODUCED OR DISCLOSED, IN WHOLE OR IN PART, WITHOUT THE PRIOR WRITTEN CONSENT OF OTIS, AND THAT ON DEMAND IT AND ANY COPIES WILL BE PROMPTLY RETURNED TO OTIS.	MATERIAL:	OTIS ENGINEERING CENTER SHANGHAI
	UNPUBLISHED WORK ©2011 OTIS ELEVATOR COMPANY ALL RIGHTS RESERVED.	DRAWN JS YUN	ORIGINAL DATE 2014-04-08
	Otis A United Technologies Company	CHK DH PARK/DH RYU	
		APPD JS LIM	
		SPEC: AUTH CN366761	150 SHEETS
		FINISH:	SHEET 40-2

ALL DIMENSIONS METRIC

DRAFTED IN ACCORDANCE WITH OTIS DOCUMENT 52847

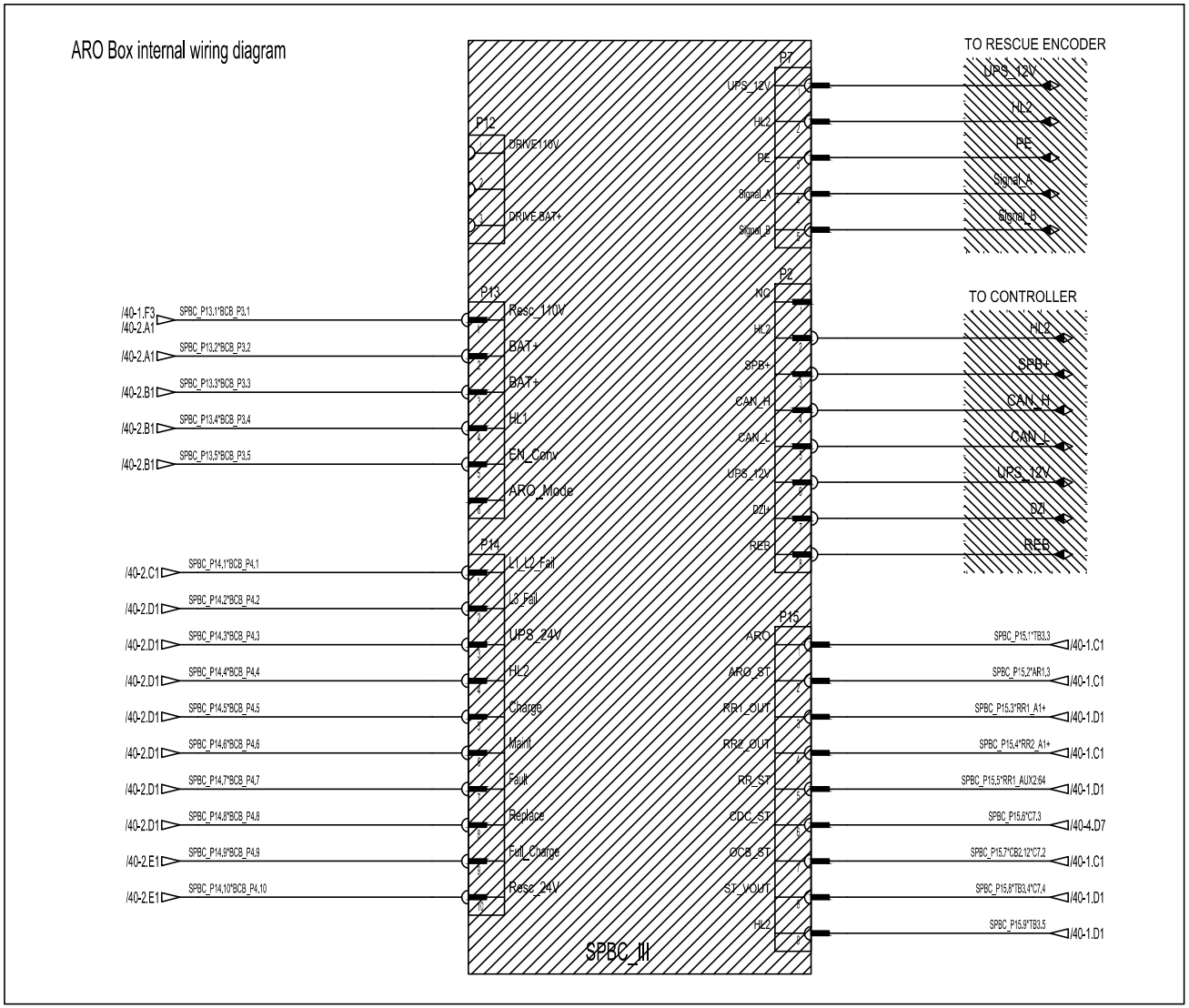

Note: this sheet is for ARO box internal wiring diagram;

CHANGES	WARNING	Wiring Diagram ACD4-MR	DWG KAA21311AAF
	THIS WORK AND THE INFORMATION IT CONTAINS ARE THE PROPERTY OF OTIS ELEVATOR COMPANY ("OTIS"). IT IS BELIEVED TO OTHERS ON THE EXPRESS CONDITION THAT IT WILL BE USED ONLY FOR OR ON BEHALF OF OTIS THAT NEITHER IT NOR THE INFORMATION IT CONTAINS WILL BE REPRODUCED OR DISCLOSED, IN WHOLE OR IN PART, WITHOUT THE PRIOR WRITTEN CONSENT OF OTIS AND THAT ON DEMAND IT AND ANY COPIES WILL BE PROMPTLY RETURNED TO OTIS.		OTIS ENGINEERING CENTER SHANGHAI
	UNPUBLISHED WORK ©2011 ELEVATOR COMPANY ALL RIGHTS RESERVED.	MATERIAL:	DRAWN JS YUN / CHK DH PARK/DH RYU / APPD JS LIM / AUTH CN366761 — ORIGINAL DATE 2014-04-08
	Otis A United Technologies Company	SPEC: / FINISH:	150 SHEETS / SHEET 40-3

ALL DIMENSIONS METRIC

DRAFTED IN ACCORDANCE WITH OTIS DOCUMENT 52847

ARO Box internal wiring diagram

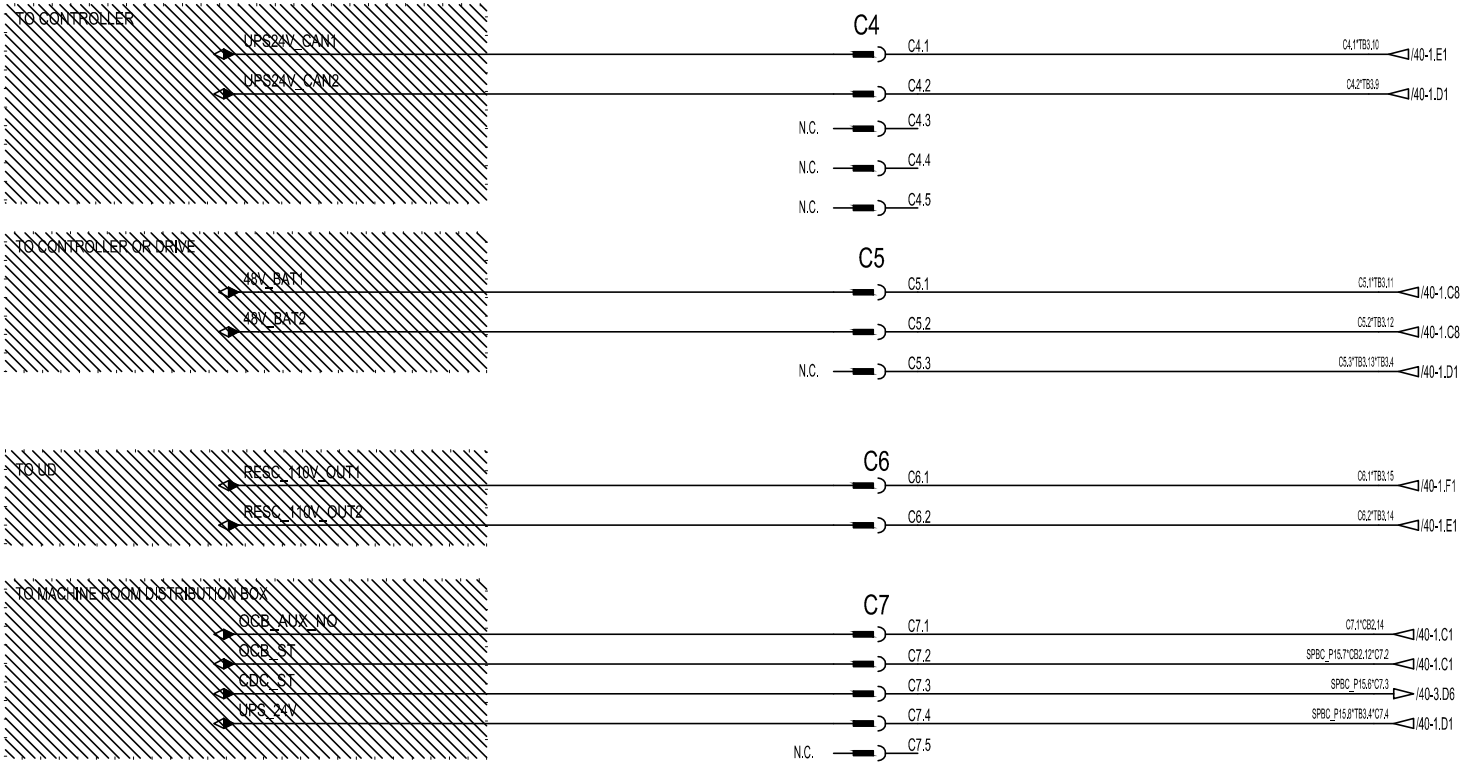

Note: this sheet is for ARO box internal wiring diagram;

CHANGES	WARNING	Wiring Diagram ACD4-MR	DWG KAA21311AAF
	THIS WORK AND THE INFORMATION IT CONTAINS ARE THE PROPERTY OF OTIS ELEVATOR COMPANY ("OTIS"). IT IS DELIVERED TO OTHERS ON THE EXPRESS CONDITION THAT IT WILL BE USED ONLY FOR OR ON BEHALF OF OTIS THAT NEITHER IT NOR THE INFORMATION IT CONTAINS WILL BE REPRODUCED OR DISCLOSED, IN WHOLE OR IN PART, WITHOUT THE PRIOR WRITTEN CONSENT OF OTIS, AND THAT ON DEMAND IT AND ANY COPIES WILL BE PROMPTLY RETURNED TO OTIS. UNPUBLISHED WORK © ELEVATOR COMPANY ALL RIGHTS RESERVED.	MATERIAL:	OTIS ENGINEERING CENTER SHANGHAI
			DRAWN JS YUN / CHK DH PARK/DH RYU / APPD JS LIM / AUTH CN366761 — ORIGINAL DATE 2014-04-08
		SPEC: / FINISH:	150 SHEETS / SHEET 40-4

ALL DIMENSIONS METRIC

DRAFTED IN ACCORDANCE WITH OTIS DOCUMENT 52847

FOR Commercial SDTOHQN7

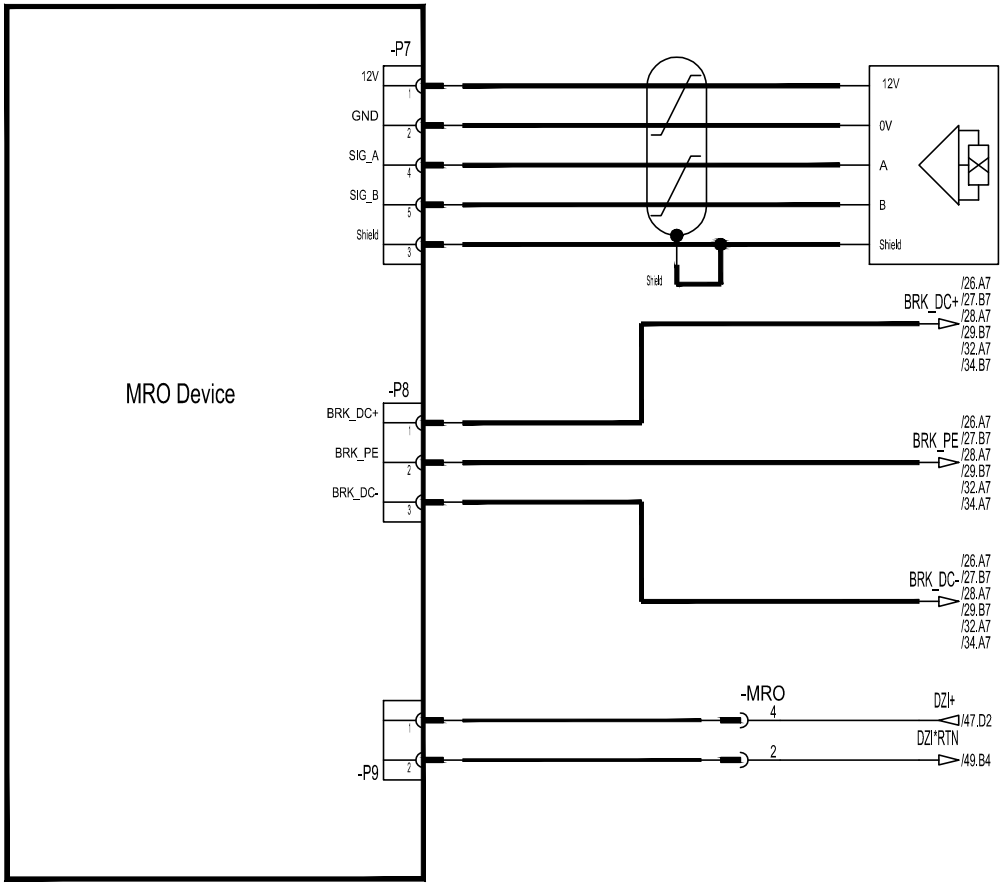

CHANGES

WARNING
THIS WORK AND THE INFORMATION IT CONTAINS ARE THE PROPERTY OF OTIS ELEVATOR COMPANY ("OTIS"). IT IS DELIVERED TO OTHERS ON THE EXPRESS CONDITION THAT IT WILL BE USED ONLY FOR OR ON BEHALF OF OTIS THAT NEITHER IT NOR THE INFORMATION IT CONTAINS WILL BE REPRODUCED OR DISCLOSED, IN WHOLE OR IN PART, WITHOUT THE PRIOR WRITTEN CONSENT OF OTIS, AND THAT ON DEMAND IT AND ANY COPIES WILL BE PROMPTLY RETURNED TO OTIS.
UNPUBLISHED WORK ©2011 ELEVATOR COMPANY
ALL RIGHTS RESERVED.

Otis
A United Technologies Company

Wiring Diagram
ACD4-MR

MATERIAL:
SPEC:
FINISH:

DWG KAA21311AAF
OTIS ENGINEERING CENTER
SHANGHAI

DRAWN	JS YUN	ORIGINAL DATE
CHK	DH PARK/DH RYU	2014-04-08
APPD	JS LIM	
AUTH	CN366761	150 SHEETS
		SHEET 41

ALL DIMENSIONS METRIC

DRAFTED IN ACCORDANCE WITH OTIS DOCUMENT 52847

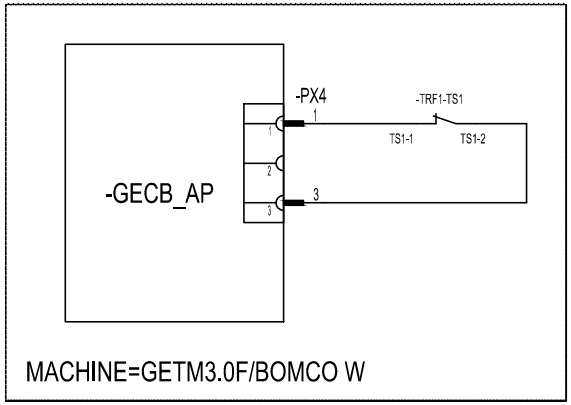

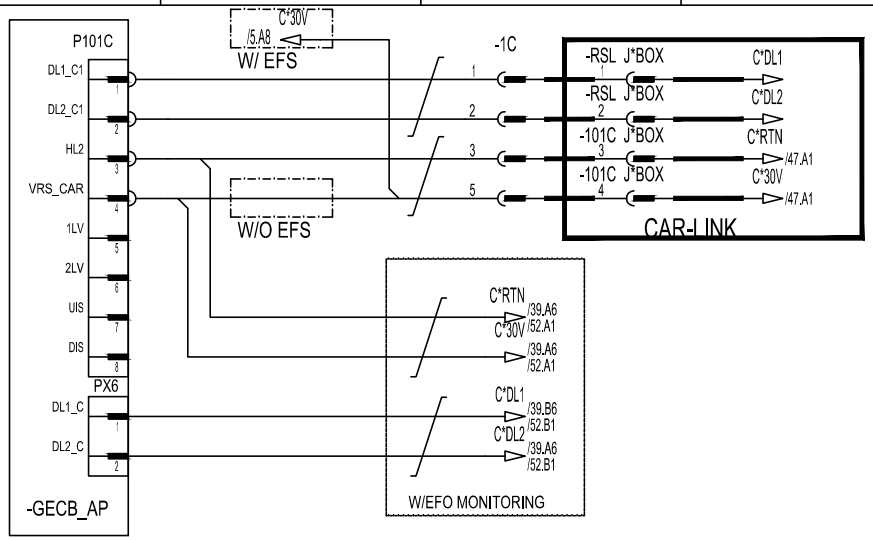

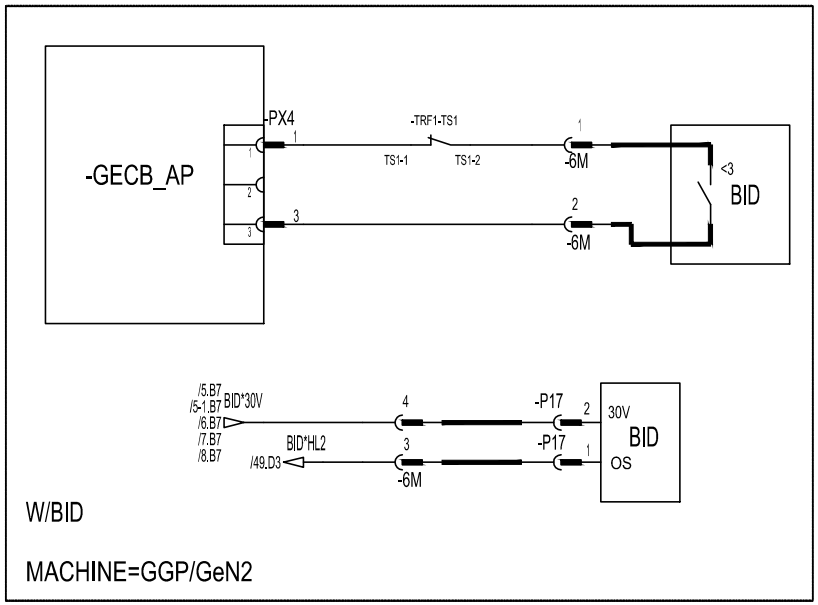

CHANGES		
2013-3-21	<3	Update BID contact;
		Minjie Pan CN396877

WARNING
THIS WORK AND THE INFORMATION IT CONTAINS ARE THE PROPERTY OF OTIS ELEVATOR COMPANY ("OTIS"). IT IS SUBMITTED TO OTHERS ON THE EXPRESS CONDITION THAT IT WILL BE USED ONLY FOR OR ON BEHALF OF OTIS THAT REFFER IT NOR THE INFORMATION IT CONTAINS WILL BE REPRODUCED OR DISCLOSED, IN WHOLE OR IN PART, WITHOUT THE PRIOR WRITTEN CONSENT OF OTIS AND THAT ON DEMAND IT AND ANY COPIES WILL BE PROMPTLY RETURNED TO OTIS.
UNPUBLISHED WORK © OTIS ELEVATOR COMPANY
ALL RIGHTS RESERVED.

Otis
A United Technologies Company

Wiring Diagram
ACD4-MR

MATERIAL:
SPEC:
FINISH:

DWG KAA21311AAF
OTIS ENGINEERING CENTER
SHANGHAI

DRAWN	JS YUN	ORIGINAL DATE
CHK	DH PARK/DH RYU	2014-04-08
APPD	JS LIM	
AUTH	CN366761	150 SHEETS
		SHEET 42

ALL DIMENSIONS METRIC

DRAFTED IN ACCORDANCE WITH OTIS DOCUMENT 52847

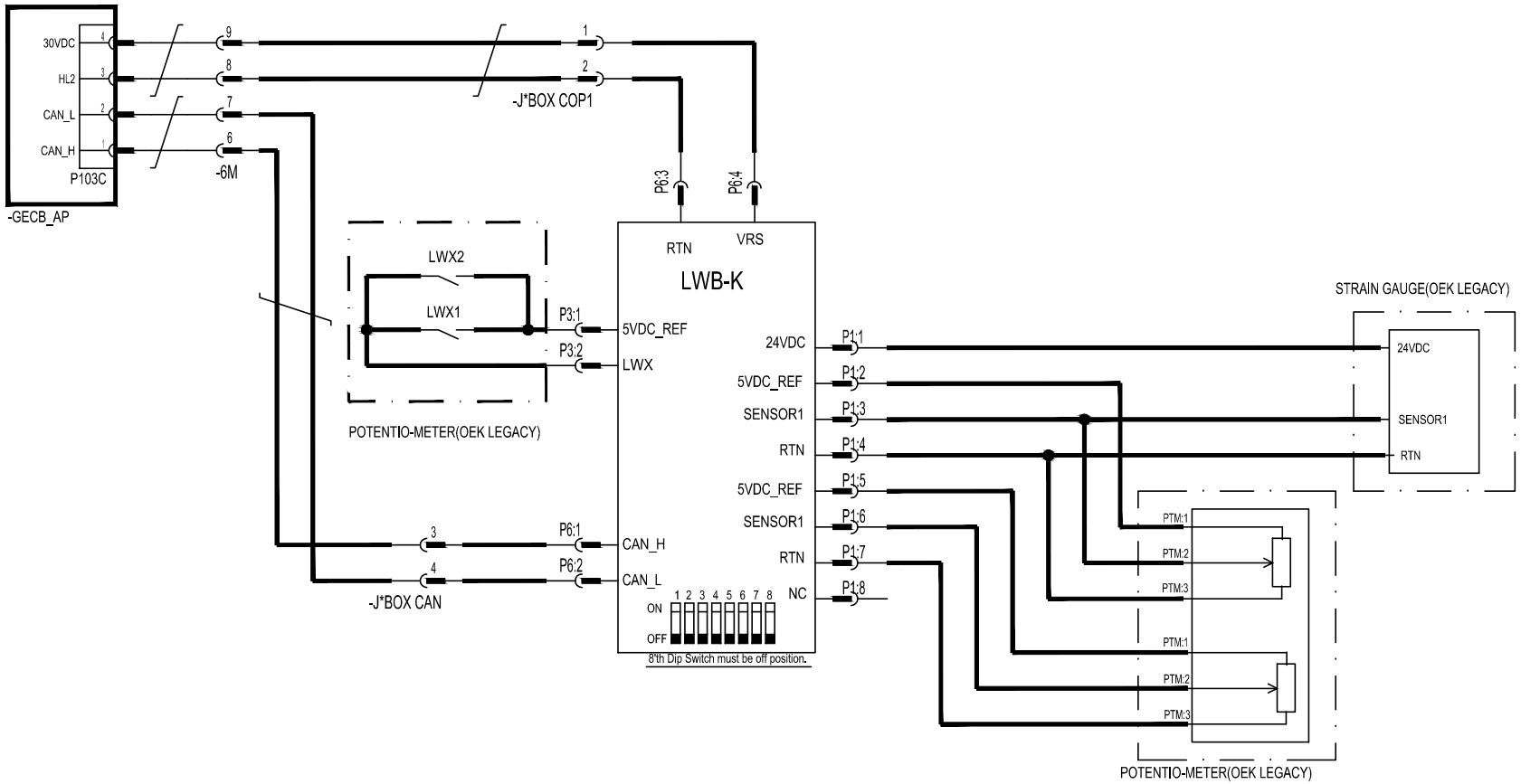

NOTES:

1. BEFORE SETTING LOAD,CHECK THE LOAD VALUE AND NO. OF SENSOR IN THE SETUP MENU.
2. SETUP MENU SERVICE TOOL KEY SEQUENCE INFORMATION.
   M-3:SETUP THE NO.OF SENSOR&FULL LOAD VALUE.
   M-4:CALIBRATION OF NO LOAD AND HALF LOAD AND FULL LOAD.

LW For KOREA

CHANGES

WARNING
THIS WORK AND THE INFORMATION IT CONTAINS ARE THE PROPERTY OF OTIS ELEVATOR COMPANY ("OTIS"). IT IS DELIVERED TO OTHERS ON THE EXPRESS CONDITION THAT IT WILL BE USED ONLY FOR OR ON BEHALF OF OTIS THAT NEITHER IT NOR THE INFORMATION IT CONTAINS WILL BE REPRODUCED OR DISCLOSED, IN WHOLE OR IN PART, WITHOUT THE PRIOR WRITTEN CONSENT OF OTIS, AND THAT ON DEMAND IT AND ANY COPIES WILL BE PROMPTLY RETURNED TO OTIS.
UNPUBLISHED WORK © ELEVATOR COMPANY
ALL RIGHTS RESERVED.

Otis
A United Technologies Company

Wiring Diagram ACD4-MR	DWG KAA21311AAF OTIS ENGINEERING CENTER SHANGHAI	
MATERIAL:	DRAWN JS YUN CHK DH PARK/DH RYU APPD JS LIM	ORIGINAL DATE 2014-04-08
SPEC:	AUTH CN366761	150 SHEETS
FINISH:		SHEET 43

ALL DIMENSIONS METRIC

DRAFTED IN ACCORDANCE WITH OTIS DOCUMENT 52847

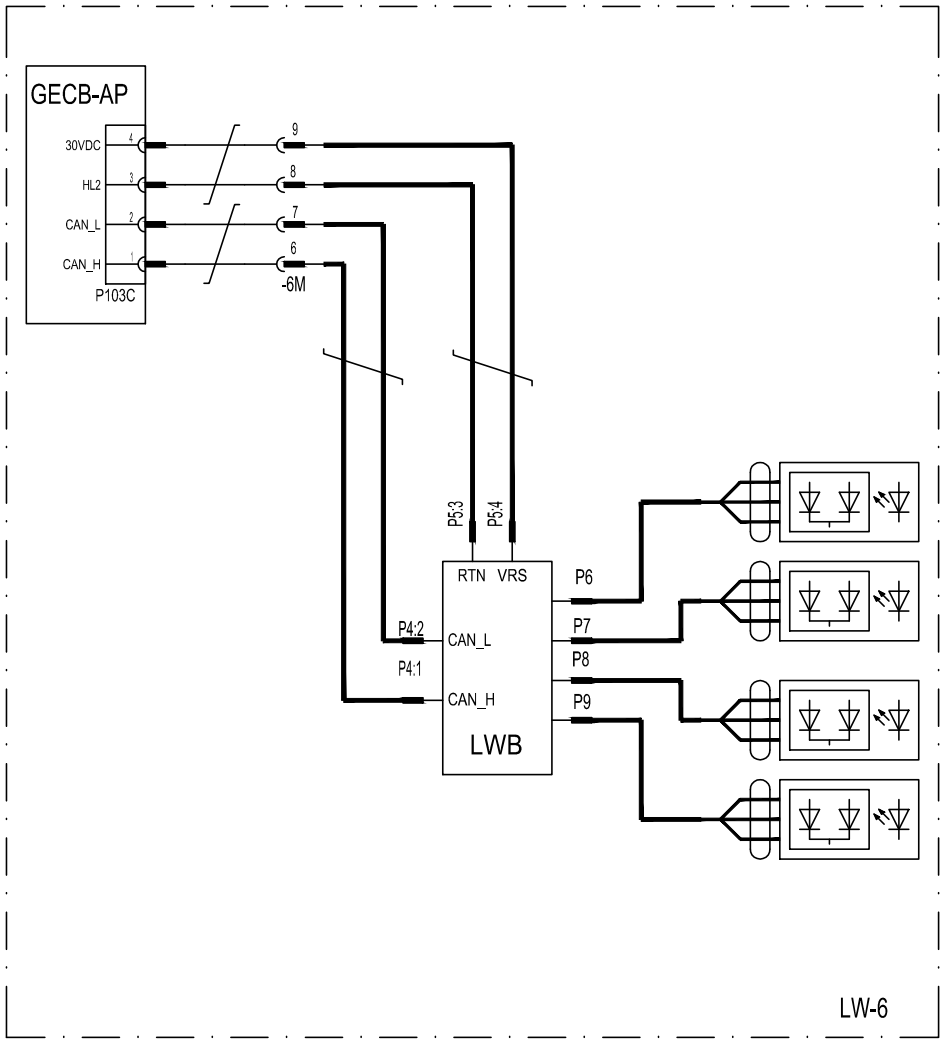

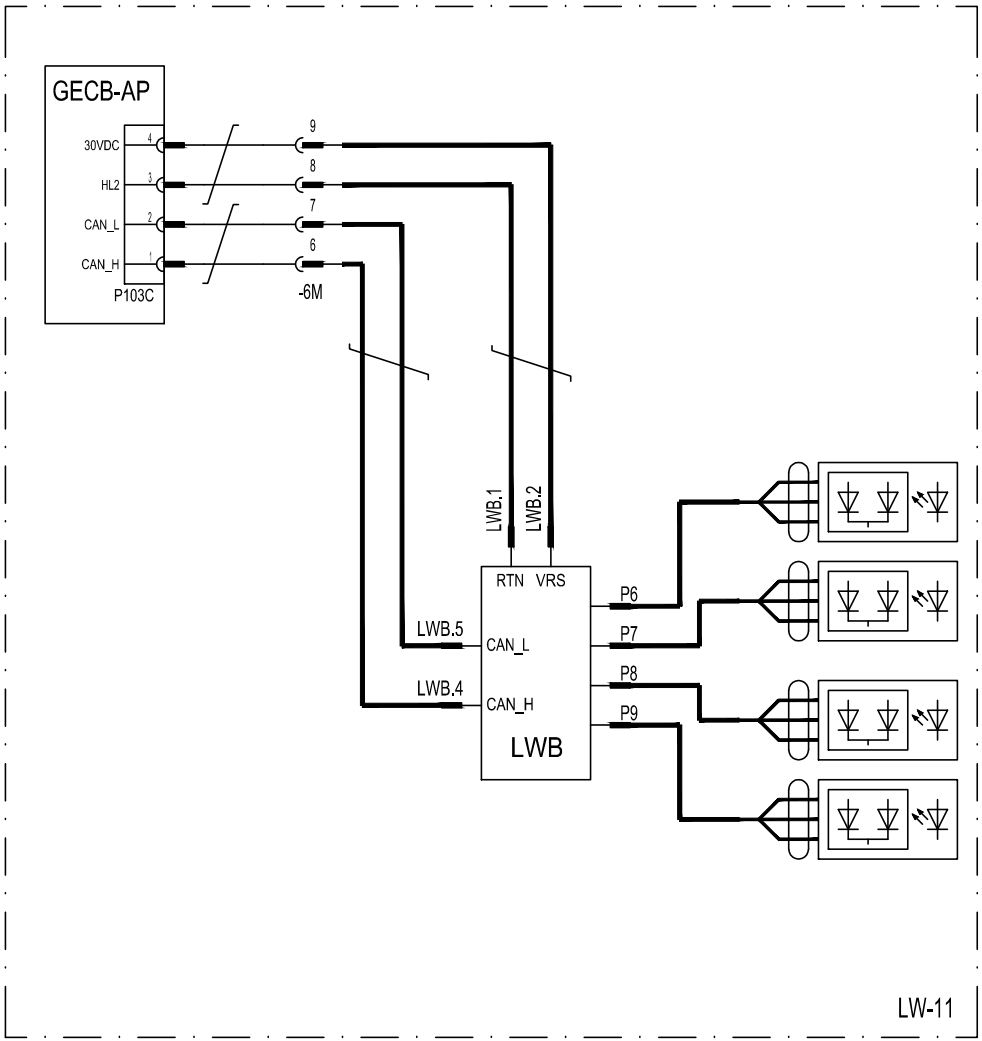

OTHER AREA &
LW LOCATED IN MACHINE ROOM OR CAR INTERFACE

CHANGES	WARNING	Wiring Diagram ACD4-MR	DWG KAA21311AAF
	THIS WORK AND THE INFORMATION IT CONTAINS ARE THE PROPERTY OF OTIS ELEVATOR COMPANY ("OTIS"). IT IS DELIVERED TO OTHERS ON THE EXPRESS CONDITION THAT IT WILL BE USED ONLY FOR, OR ON BEHALF OF OTIS THAT NEITHER IT NOR THE INFORMATION IT CONTAINS WILL BE REPRODUCED OR DISCLOSED, IN WHOLE OR IN PART, WITHOUT THE PRIOR WRITTEN CONSENT OF OTIS, AND THAT ON DEMAND IT AND ANY COPIES WILL BE PROMPTLY RETURNED TO OTIS.	MATERIAL:	OTIS ENGINEERING CENTER SHANGHAI
	UNPUBLISHED WORK © ELEVATOR COMPANY ALL RIGHTS RESERVED.	DRAWN JS YUN / CHK DH PARK/DH RYU / APPD JS LIM / AUTH CN366761	ORIGINAL DATE 2014-04-08
	Otis A United Technologies Company	SPEC: / FINISH:	150 SHEETS / SHEET 44

ALL DIMENSIONS METRIC

DRAFTED IN ACCORDANCE WITH OTIS DOCUMENT 52847

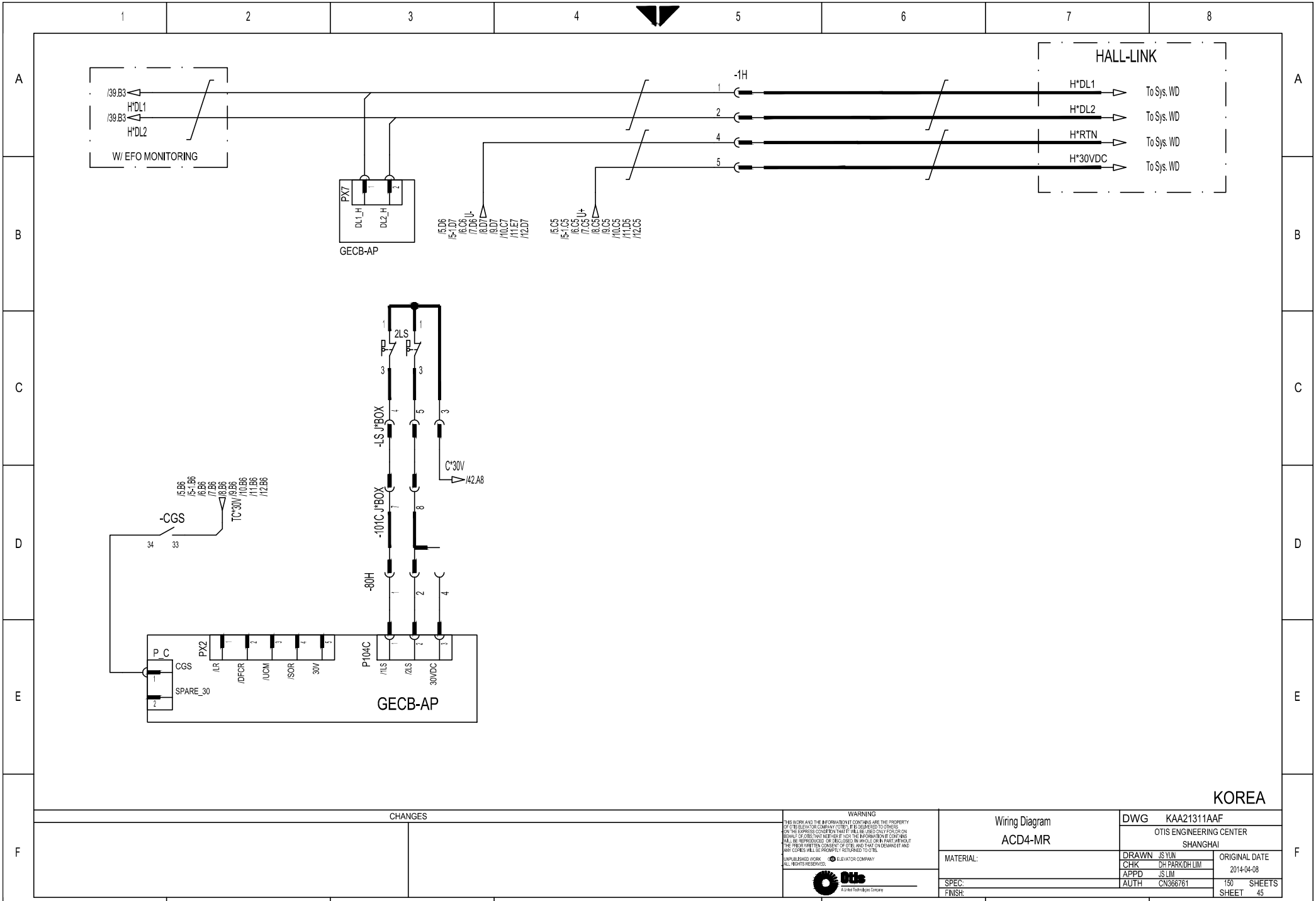

KOREA

CHANGES	WARNING	Wiring Diagram ACD4-MR	DWG KAA21311AAF
	THIS WORK AND THE INFORMATION IT CONTAINS ARE THE PROPERTY OF OTIS ELEVATOR COMPANY ("OTIS"). IT IS DELIVERED TO OTHERS ON THE EXPRESS CONDITION THAT IT WILL BE USED ONLY FOR OR ON BEHALF OF OTIS THAT NEITHER IT NOR THE INFORMATION IT CONTAINS WILL BE REPRODUCED OR DISCLOSED, IN WHOLE OR IN PART, WITHOUT THE PRIOR WRITTEN CONSENT OF OTIS, AND THAT ON DEMAND IT AND ANY COPIES WILL BE PROMPTLY RETURNED TO OTIS.	MATERIAL:	OTIS ENGINEERING CENTER SHANGHAI
	UNPUBLISHED WORK © ELEVATOR COMPANY ALL RIGHTS RESERVED.	SPEC:	DRAWN JS YUN / CHK DH PARK/DH LIM / APPD JS LIM / AUTH CN366761
	Otis A United Technologies Company	FINISH:	ORIGINAL DATE 2014-04-08
			150 SHEETS / SHEET 45

ALL DIMENSIONS METRIC

DRAFTED IN ACCORDANCE WITH OTIS DOCUMENT 52847

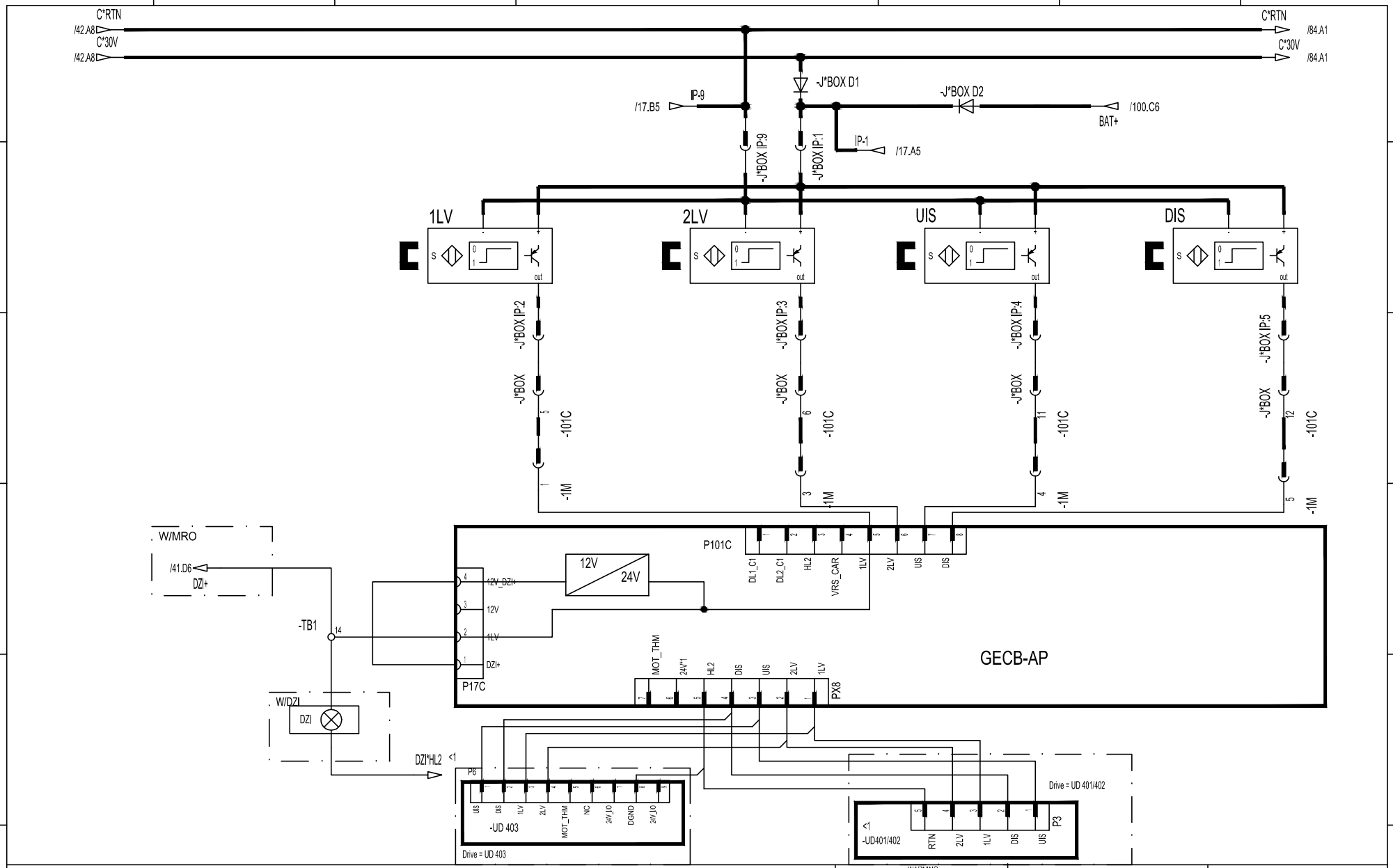

CHANGES

2013-01-11	<1 Was "UD401/402/403"	<1 Add UD403 related circuit;
	<1 Change DZI to optional;	Minjie Pan CN375251

WARNING
THIS WORK AND THE INFORMATION IT CONTAINS ARE THE PROPERTY OF OTIS ELEVATOR COMPANY ("OTIS"). IT IS DELIVERED TO OTHERS ON THE EXPRESS CONDITION THAT IT WILL BE USED ONLY FOR OR ON BEHALF OF OTIS THAT NEITHER IT NOR THE INFORMATION IT CONTAINS WILL BE REPRODUCED OR DISCLOSED, IN WHOLE OR IN PART, WITHOUT THE PRIOR WRITTEN CONSENT OF OTIS, AND THAT ON DEMAND IT AND ANY COPIES WILL BE PROMPTLY RETURNED TO OTIS.
UNPUBLISHED WORK ©2011 OTIS ELEVATOR COMPANY
ALL RIGHTS RESERVED.

Otis
A United Technologies Company

Wiring Diagram
ACD4-MR

MATERIAL:
SPEC:
FINISH:

DWG KAA21311AAF
OTIS ENGINEERING CENTER
SHANGHAI

DRAWN	JS YUN	ORIGINAL DATE
CHK	DH PARK/DH RYU	2014-04-08
APPD	JS LIM	
AUTH	CN366761	150 SHEETS
		SHEET 47

ALL DIMENSIONS METRIC

DRAFTED IN ACCORDANCE WITH OTIS DOCUMENT 52847

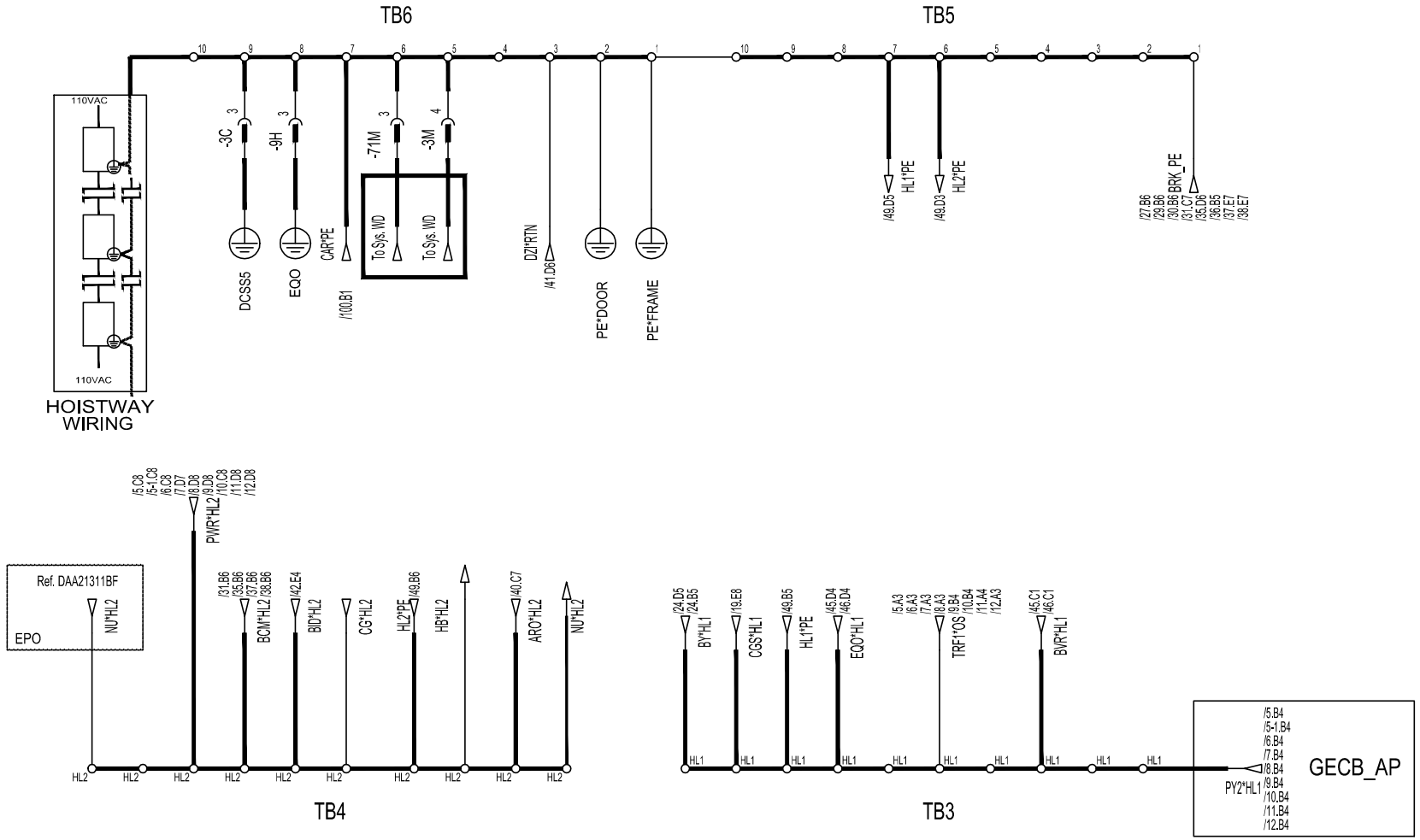

CHANGES

WARNING

THIS WORK AND THE INFORMATION IT CONTAINS ARE THE PROPERTY OF OTIS ELEVATOR COMPANY ("OTIS"). IT IS SUBMITTED TO OTHERS ON THE EXPRESS CONDITION THAT IT WILL BE USED ONLY FOR OR ON BEHALF OF OTIS THAT REFRAIN IF NOR THE INFORMATION IT CONTAINS WILL BE REPRODUCED OR DISCLOSED, IN WHOLE OR IN PART, WITHOUT THE PRIOR WRITTEN CONSENT OF OTIS, AND THAT ON DEMAND IT AND ANY COPIES WILL BE PROMPTLY RETURNED TO OTIS.

UNPUBLISHED WORK © ELEVATOR COMPANY
ALL RIGHTS RESERVED.

Otis
A United Technologies Company

Wiring Diagram
ACD4-MR

MATERIAL:

SPEC:

FINISH:

DWG	KAA21311AAF
	OTIS ENGINEERING CENTER SHANGHAI
DRAWN	JS YUN
CHK	DH PARK/DH RYU
APPD	JS LIM
AUTH	CN366761
ORIGINAL DATE	2014-04-08
SHEET	150 SHEETS 49

ALL DIMENSIONS METRIC

DRAFTED IN ACCORDANCE WITH OTIS DOCUMENT 52847

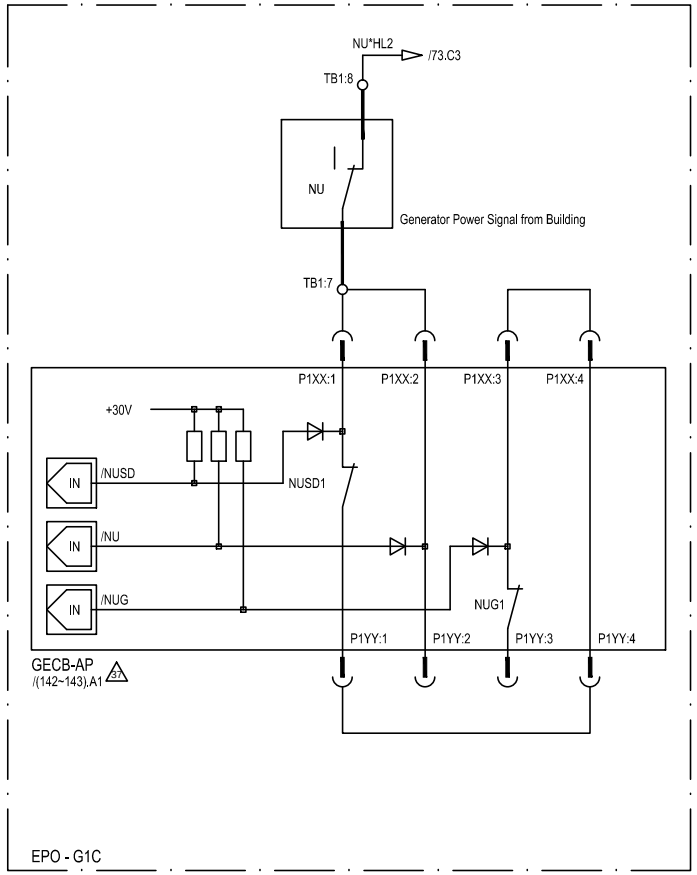

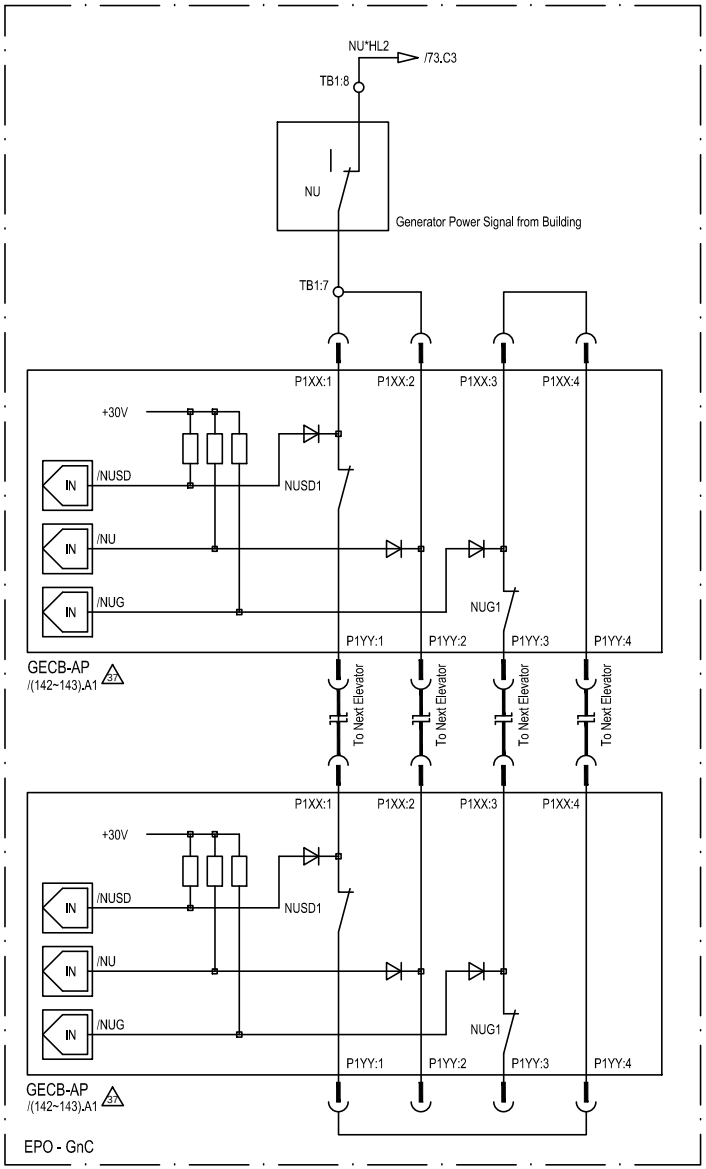

CHANGES	WARNING	Wiring Diagram ACD4-MR	DWG KAA21311AAF
	THIS WORK AND THE INFORMATION IT CONTAINS ARE THE PROPERTY OF OTIS ELEVATOR COMPANY ("OTIS"), IT IS DELIVERED TO OTHERS ON THE EXPRESS CONDITION THAT IT WILL BE USED ONLY FOR OR ON BEHALF OF OTIS, THAT NEITHER IT NOR THE INFORMATION IT CONTAINS WILL BE REPRODUCED OR DISCLOSED, IN WHOLE OR IN PART, WITHOUT THE PRIOR WRITTEN CONSENT OF OTIS, AND THAT ON DEMAND IT AND ANY COPIES WILL BE PROMPTLY RETURNED TO OTIS.	MATERIAL:	OTIS ENGINEERING CENTER SHANGHAI
	UNPUBLISHED WORK. © ELEVATOR COMPANY ALL RIGHTS RESERVED.	DRAWN JS YUN / CHK DH PARK/DH RYU / APPD JS LIM / AUTH CN366761	ORIGINAL DATE 2014-04-08
	Otis A United Technologies Company	SPEC: / FINISH:	150 SHEETS / SHEET 80

ALL DIMENSIONS METRIC

DRAFTED IN ACCORDANCE WITH OTIS DOCUMENT 52847

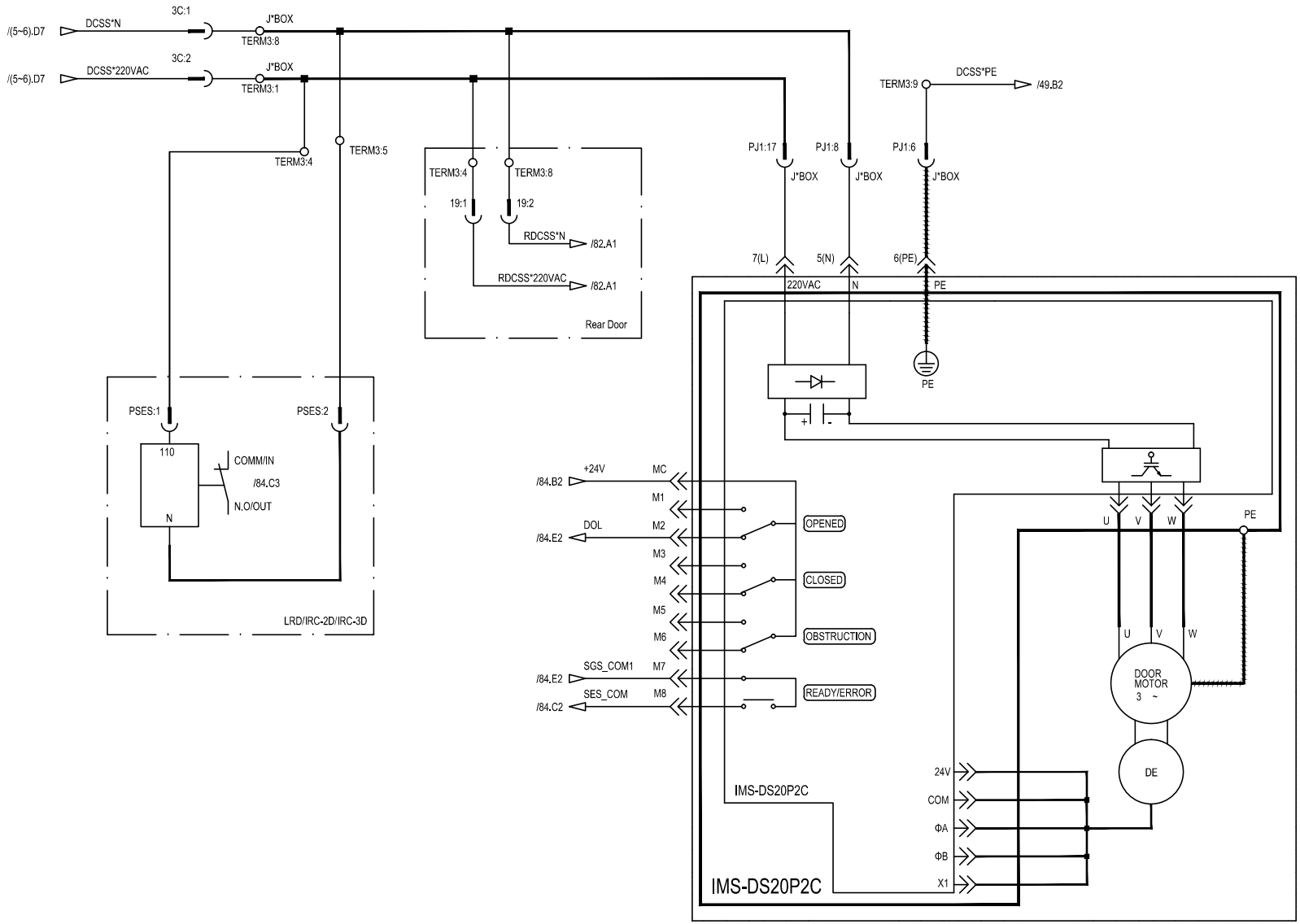

CHANGES	WARNING	Wiring Diagram ACD4-MR	DWG KAA21311AAF
	THIS WORK AND THE INFORMATION IT CONTAINS ARE THE PROPERTY OF OTIS ELEVATOR COMPANY ("OTIS"), IT IS DELIVERED TO OTHERS ON THE EXPRESS CONDITION THAT IT WILL BE USED ONLY FOR, OR ON BEHALF OF, OTIS; THAT NEITHER IT NOR THE INFORMATION IT CONTAINS WILL BE REPRODUCED OR DISCLOSED, IN WHOLE OR IN PART, WITHOUT THE PRIOR WRITTEN CONSENT OF OTIS; AND THAT ON DEMAND IT AND ANY COPIES WILL BE PROMPTLY RETURNED TO OTIS.		OTIS ENGINEERING CENTER SHANGHAI
	UNPUBLISHED WORK. © ELEVATOR COMPANY ALL RIGHTS RESERVED.	MATERIAL:	DRAWN JS YUN / CHK DH PARK/DH RYU / APPD JS LIM / AUTH CN366761 — ORIGINAL DATE 2014-04-08
	Otis A United Technologies Company	SPEC: / FINISH:	150 SHEETS / SHEET 81

ALL DIMENSIONS METRIC

DRAFTED IN ACCORDANCE WITH OTIS DOCUMENT 52847

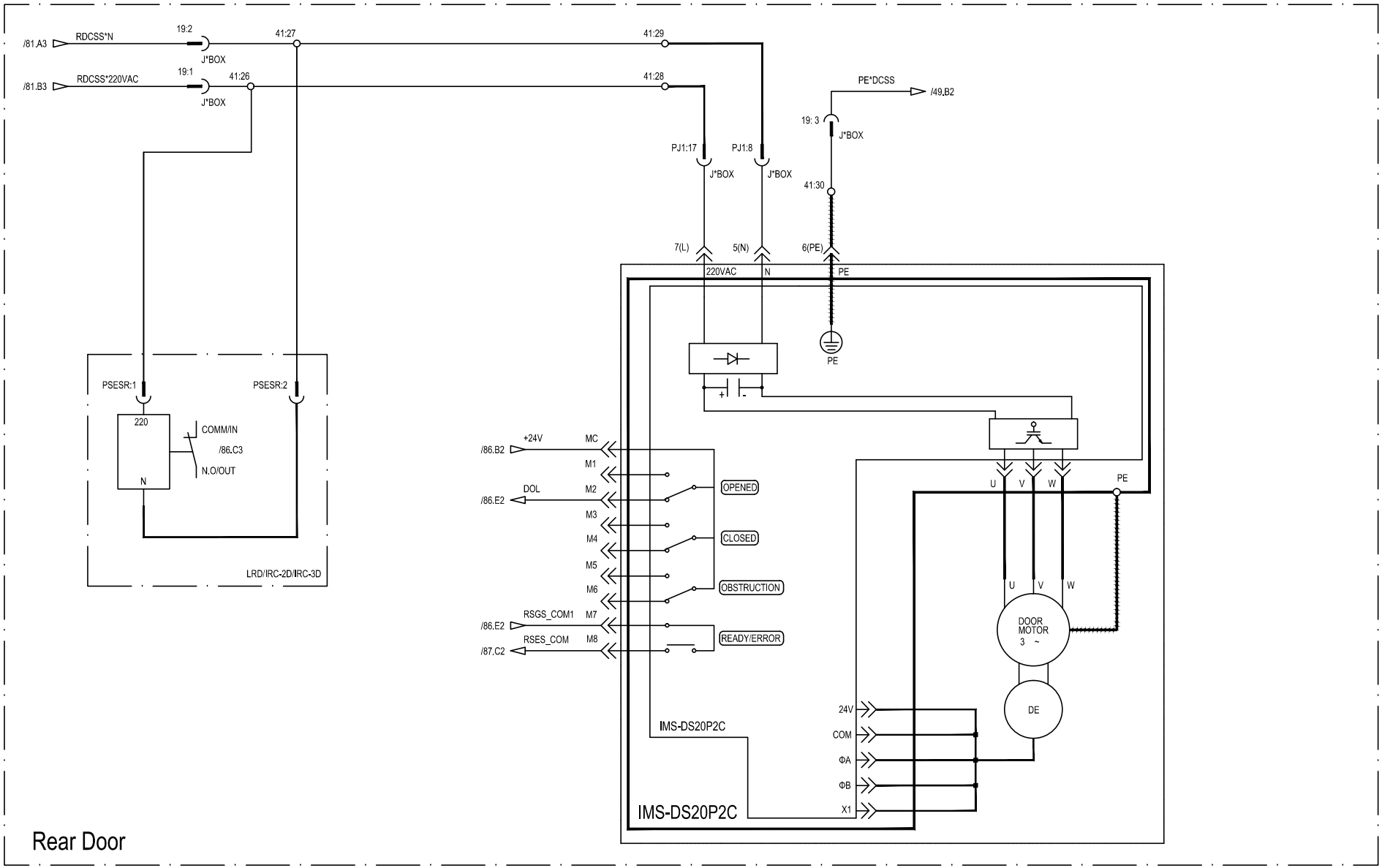

Rear Door

CHANGES	WARNING	Wiring Diagram ACD4-MR	DWG KAA21311AAF
	THIS WORK AND THE INFORMATION IT CONTAINS ARE THE PROPERTY OF OTIS ELEVATOR COMPANY ("OTIS"), IT IS BE LIENED TO OTHERS ON THE EXPRESS CONDITION THAT IT WILL BE USED ONLY FOR OR ON BEHALF OF OTIS, THAT NEITHER IT NOR THE INFORMATION IT CONTAINS WILL BE REPRODUCED OR DISCLOSED, IN WHOLE OR IN PART, WITHOUT THE PRIOR WRITTEN CONSENT OF OTIS, AND THAT ON DEMAND IT AND ANY COPIES WILL BE PROMPTLY RETURNED TO OTIS.		OTIS ENGINEERING CENTER SHANGHAI
	UNPUBLISHED WORK. ©2011 ELEVATOR COMPANY ALL RIGHTS RESERVED.	MATERIAL:	DRAWN JS YUN / CHK DH PARK/DH RYU / APPD JS LIM / AUTH CN366761 — ORIGINAL DATE 2014-04-08
	Otis A United Technologies Company	SPEC: / FINISH:	150 SHEETS / SHEET 82

ALL DIMENSIONS METRIC

DRAFTED IN ACCORDANCE WITH OTIS DOCUMENT 52847

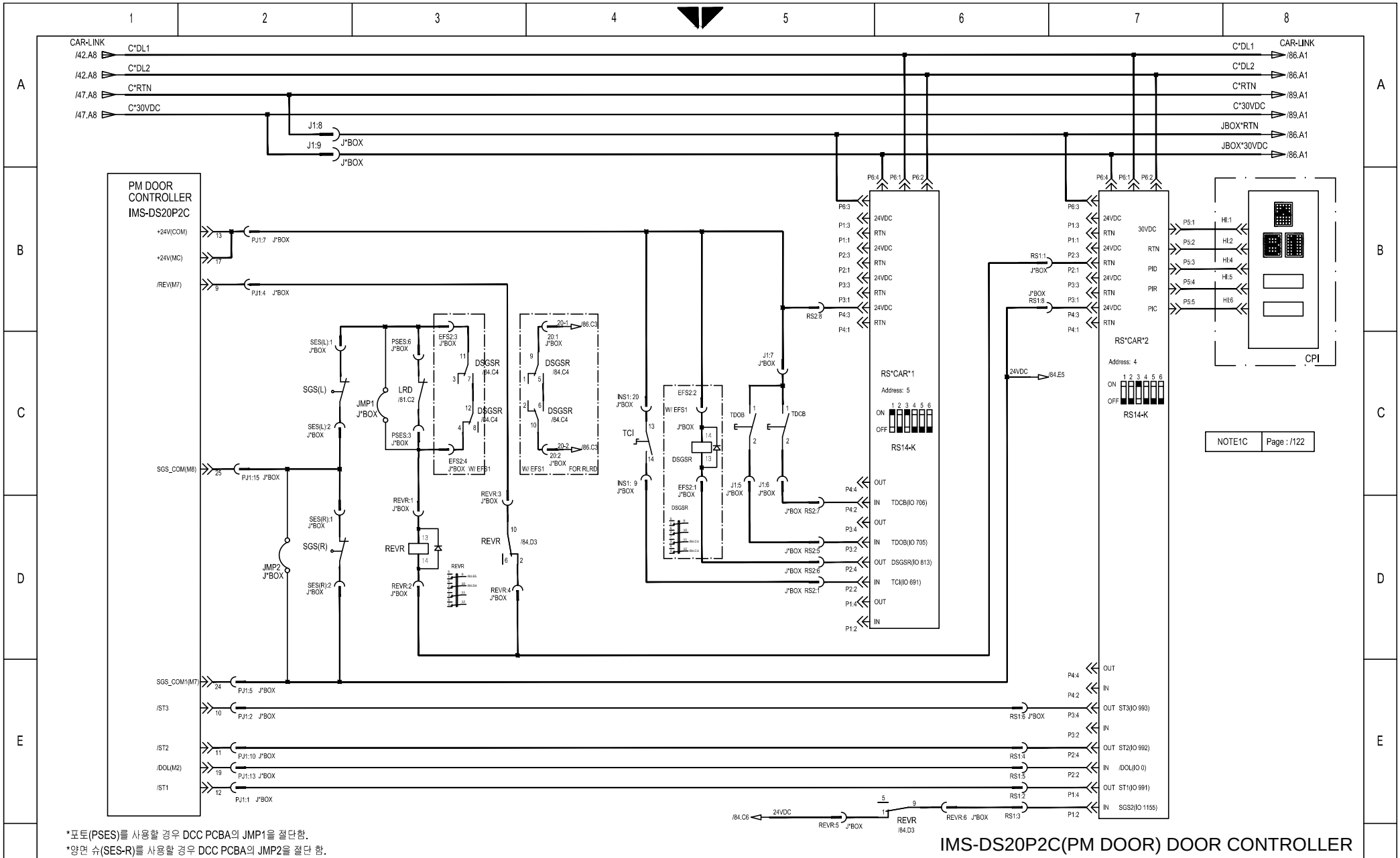

*포토(PSES)를 사용할 경우 DCC PCBA의 JMP1을 절단함.
*양면 슈(SES-R)를 사용할 경우 DCC PCBA의 JMP2을 절단 함.

IMS-DS20P2C(PM DOOR) DOOR CONTROLLER

CHANGES	WARNING	Wiring Diagram ACD4-MR	DWG KAA21311AAF
	THIS WORK AND THE INFORMATION IT CONTAINS ARE THE PROPERTY OF OTIS ELEVATOR COMPANY ("OTIS") AND SHALL NOT BE DISCLOSED TO OTHERS ON THE EXPRESS CONDITION THAT IT WILL BE USED ONLY FOR, OR ON BEHALF OF, OTIS, THAT NEITHER IT NOR THE INFORMATION IT CONTAINS WILL BE REPRODUCED OR DISCLOSED, IN WHOLE OR IN PART, WITHOUT THE PRIOR WRITTEN CONSENT OF OTIS, AND THAT ON DEMAND IT AND ANY COPIES WILL BE PROMPTLY RETURNED TO OTIS.		OTIS ENGINEERING CENTER SHANGHAI
	UNPUBLISHED WORK. © ELEVATOR COMPANY ALL RIGHTS RESERVED.	MATERIAL:	DRAWN JS YUN / CHK DH PARK/DH RYU / APPD JS LIM / AUTH CN366761 — ORIGINAL DATE 2014-04-08
	Otis A United Technologies Company	SPEC: / FINISH:	150 SHEETS / SHEET 84

ALL DIMENSIONS METRIC

DRAFTED IN ACCORDANCE WITH OTIS DOCUMENT 52847

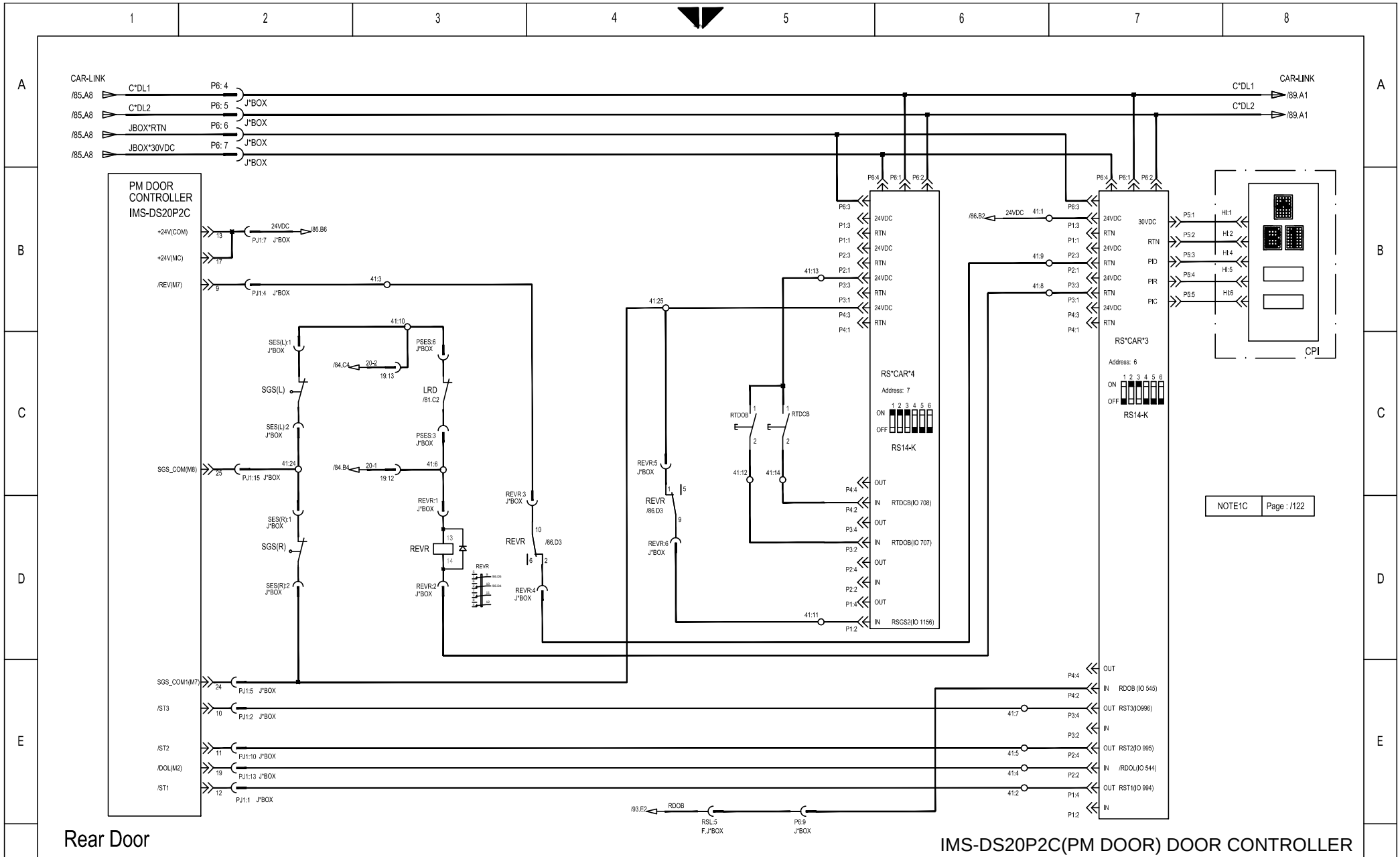

CHANGES

WARNING

THIS WORK AND THE INFORMATION IT CONTAINS ARE THE PROPERTY OF OTIS ELEVATOR COMPANY ("OTIS"). IT IS DELIVERED TO OTHERS ON THE EXPRESS CONDITION THAT IT WILL BE USED ONLY FOR OR ON BEHALF OF OTIS, THAT NEITHER IT NOR THE INFORMATION IT CONTAINS WILL BE REPRODUCED OR DISCLOSED, IN WHOLE OR IN PART, WITHOUT THE PRIOR WRITTEN CONSENT OF OTIS, AND THAT ON DEMAND IT AND ANY COPIES WILL BE PROMPTLY RETURNED TO OTIS.

UNPUBLISHED WORK. © ELEVATOR COMPANY
ALL RIGHTS RESERVED.

Otis
A United Technologies Company

Wiring Diagram
ACD4-MR

MATERIAL:
SPEC:
FINISH:

DWG KAA21311AAF
OTIS ENGINEERING CENTER
SHANGHAI

DRAWN	JS YUN	ORIGINAL DATE
CHK	DH PARK/DH RYU	2014-04-08
APPD	JS LIM	
AUTH	CN366761	150 SHEETS
		SHEET 86

ALL DIMENSIONS METRIC

DRAFTED IN ACCORDANCE WITH OTIS DOCUMENT 52847

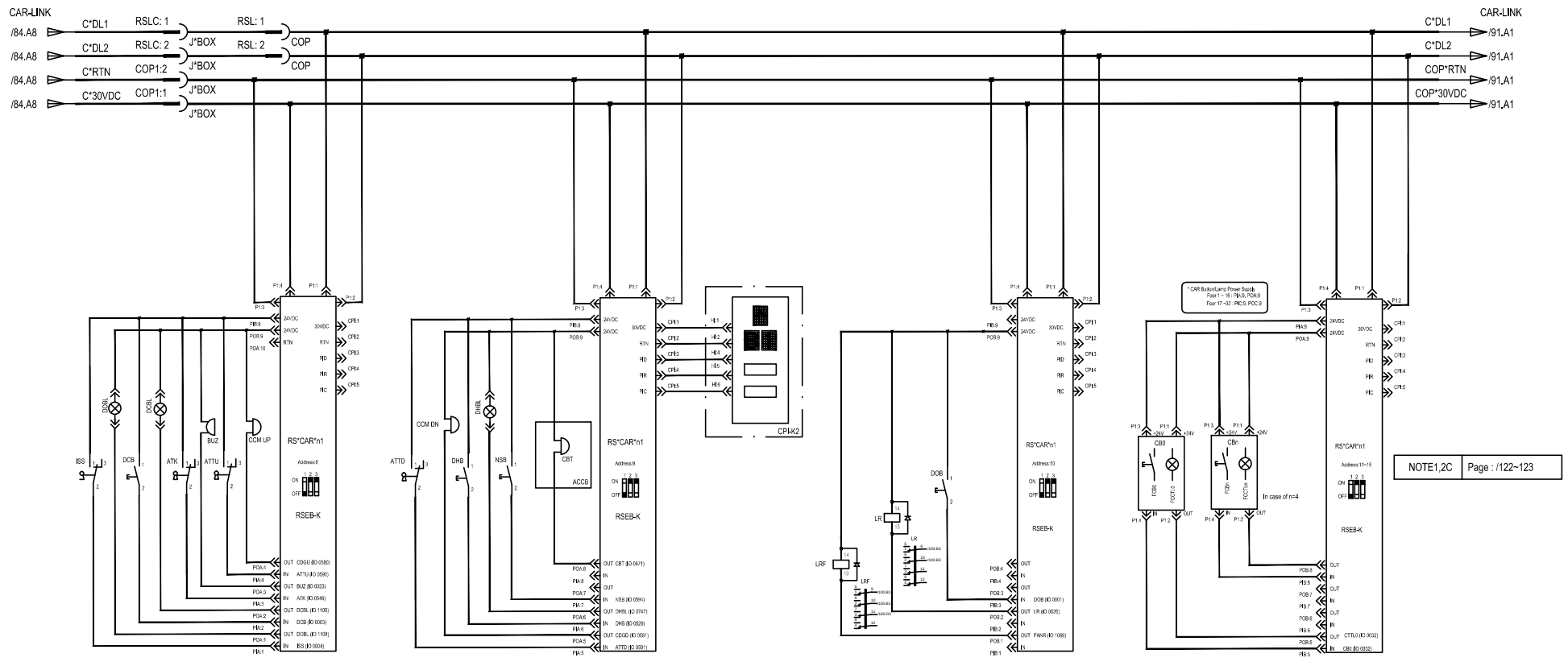

CHANGES	WARNING	Wiring Diagram ACD4-MR	DWG KAA21311AAF
	THIS WORK AND THE INFORMATION IT CONTAINS ARE THE PROPERTY OF OTIS ELEVATOR COMPANY ("OTIS"), IT IS DELIVERED TO OTHERS ON THE EXPRESS CONDITION THAT IT WILL BE USED ONLY FOR OR ON BEHALF OF OTIS, THAT NEITHER IT NOR THE INFORMATION IT CONTAINS WILL BE REPRODUCED OR DISCLOSED, IN WHOLE OR IN PART, WITHOUT THE PRIOR WRITTEN CONSENT OF OTIS, AND THAT ON DEMAND IT AND ANY COPIES WILL BE PROMPTLY RETURNED TO OTIS.	MATERIAL:	OTIS ENGINEERING CENTER SHANGHAI
	UNPUBLISHED WORK. © ELEVATOR COMPANY ALL RIGHTS RESERVED.	DRAWN JS YUN / CHK DH PARK/DH RYU / APPD JS LIM / AUTH CN366761	ORIGINAL DATE 2014-04-08
	Otis A United Technologies Company	SPEC: / FINISH:	150 SHEETS / SHEET 89

ALL DIMENSIONS METRIC

DRAFTED IN ACCORDANCE WITH OTIS DOCUMENT 52847

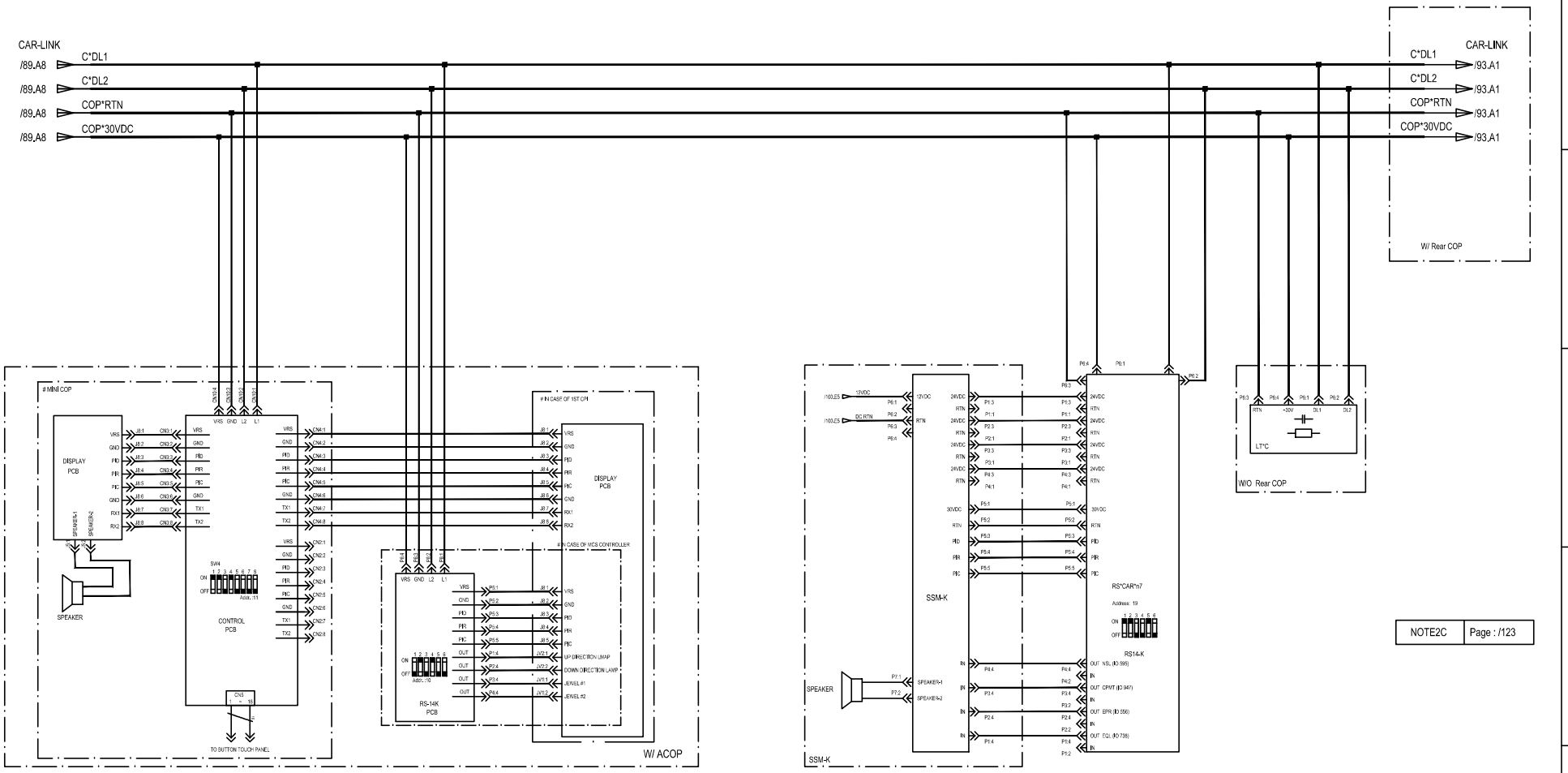

NOTE2C	Page : /123

CHANGES

WARNING
THIS WORK AND THE INFORMATION IT CONTAINS ARE THE PROPERTY OF OTIS ELEVATOR COMPANY ("OTIS"). IT IS DELIVERED TO OTHERS ON THE EXPRESS CONDITION THAT IT WILL BE USED ONLY FOR OR ON BEHALF OF OTIS, THAT NEITHER IT NOR THE INFORMATION IT CONTAINS WILL BE REPRODUCED OR DISCLOSED, IN WHOLE OR IN PART, WITHOUT THE PRIOR WRITTEN CONSENT OF OTIS, AND THAT ON DEMAND IT AND ANY COPIES WILL BE PROMPTLY RETURNED TO OTIS.
UNPUBLISHED WORK. © ELEVATOR COMPANY
ALL RIGHTS RESERVED.

Otis
A United Technologies Company

Wiring Diagram
ACD4-MR

MATERIAL:

SPEC:

FINISH:

DWG KAA21311AAF

OTIS ENGINEERING CENTER
SHANGHAI

DRAWN	JS YUN	ORIGINAL DATE
CHK	DH PARK/DH RYU	2014-04-08
APPD	JS LIM	
AUTH	CN366761	150 SHEETS
		SHEET 91

ALL DIMENSIONS METRIC

DRAFTED IN ACCORDANCE WITH OTIS DOCUMENT 52847

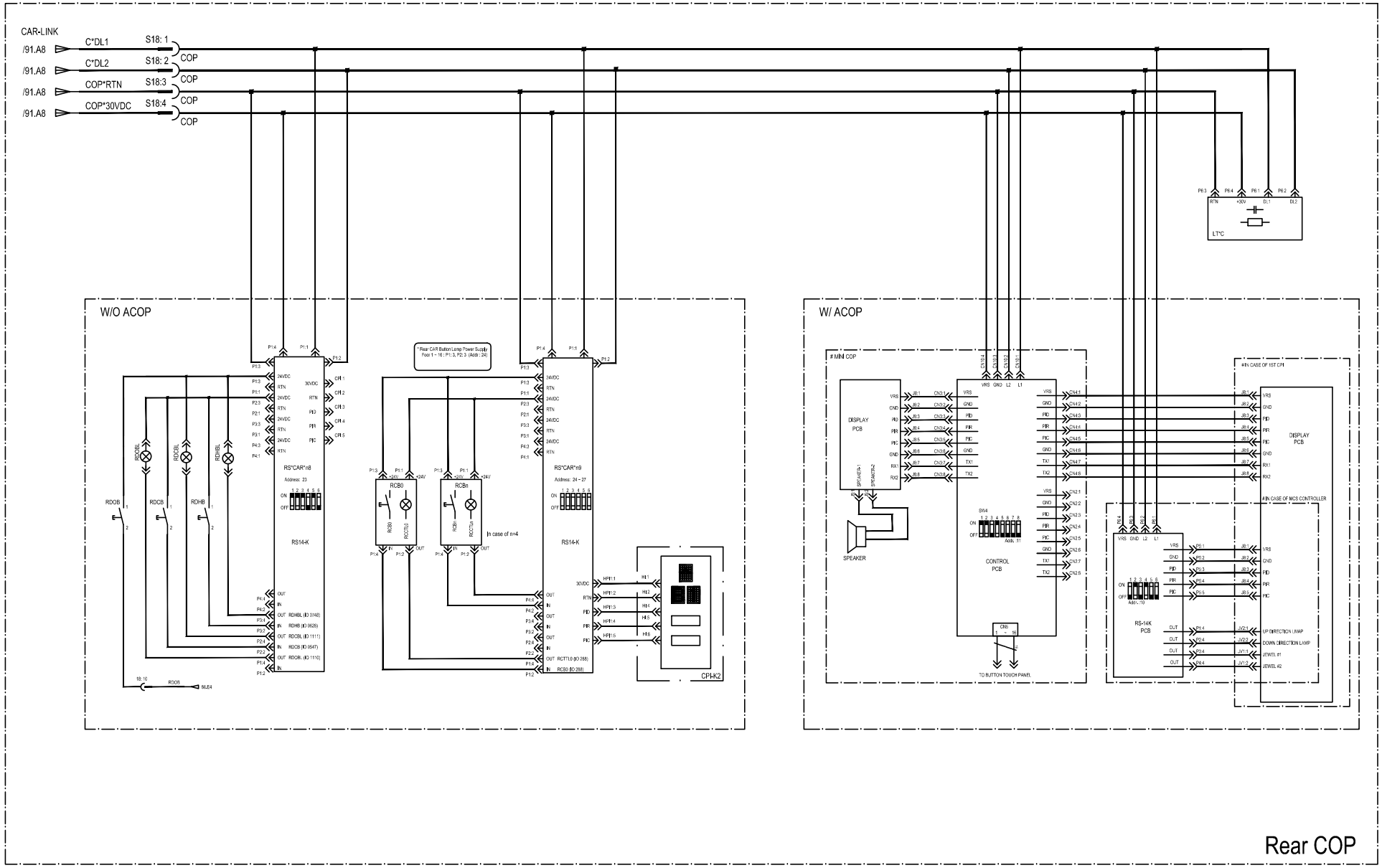

CHANGES	WARNING	Wiring Diagram ACD4-MR	DWG KAA21311AAF
	THIS WORK AND THE INFORMATION IT CONTAINS ARE THE PROPERTY OF OTIS ELEVATOR COMPANY ("OTIS"). IT IS DELIVERED TO OTHERS ON THE EXPRESS CONDITION THAT IT WILL BE USED ONLY FOR OR ON BEHALF OF OTIS, THAT NEITHER IT NOR THE INFORMATION IT CONTAINS WILL BE REPRODUCED OR DISCLOSED, IN WHOLE OR IN PART, WITHOUT THE PRIOR WRITTEN CONSENT OF OTIS, AND THAT ON DEMAND IT AND ANY COPIES WILL BE PROMPTLY RETURNED TO OTIS. UNPUBLISHED WORK. ©2014 ELEVATOR COMPANY ALL RIGHTS RESERVED. Otis A United Technologies Company	MATERIAL:	OTIS ENGINEERING CENTER SHANGHAI
		SPEC:	DRAWN JS YUN / CHK DH PARK/DH RYU / APPD JS LIM / AUTH CN366761 — ORIGINAL DATE 2014-04-08
		FINISH:	150 SHEETS / SHEET 93

ALL DIMENSIONS METRIC

DRAFTED IN ACCORDANCE WITH OTIS DOCUMENT 52847

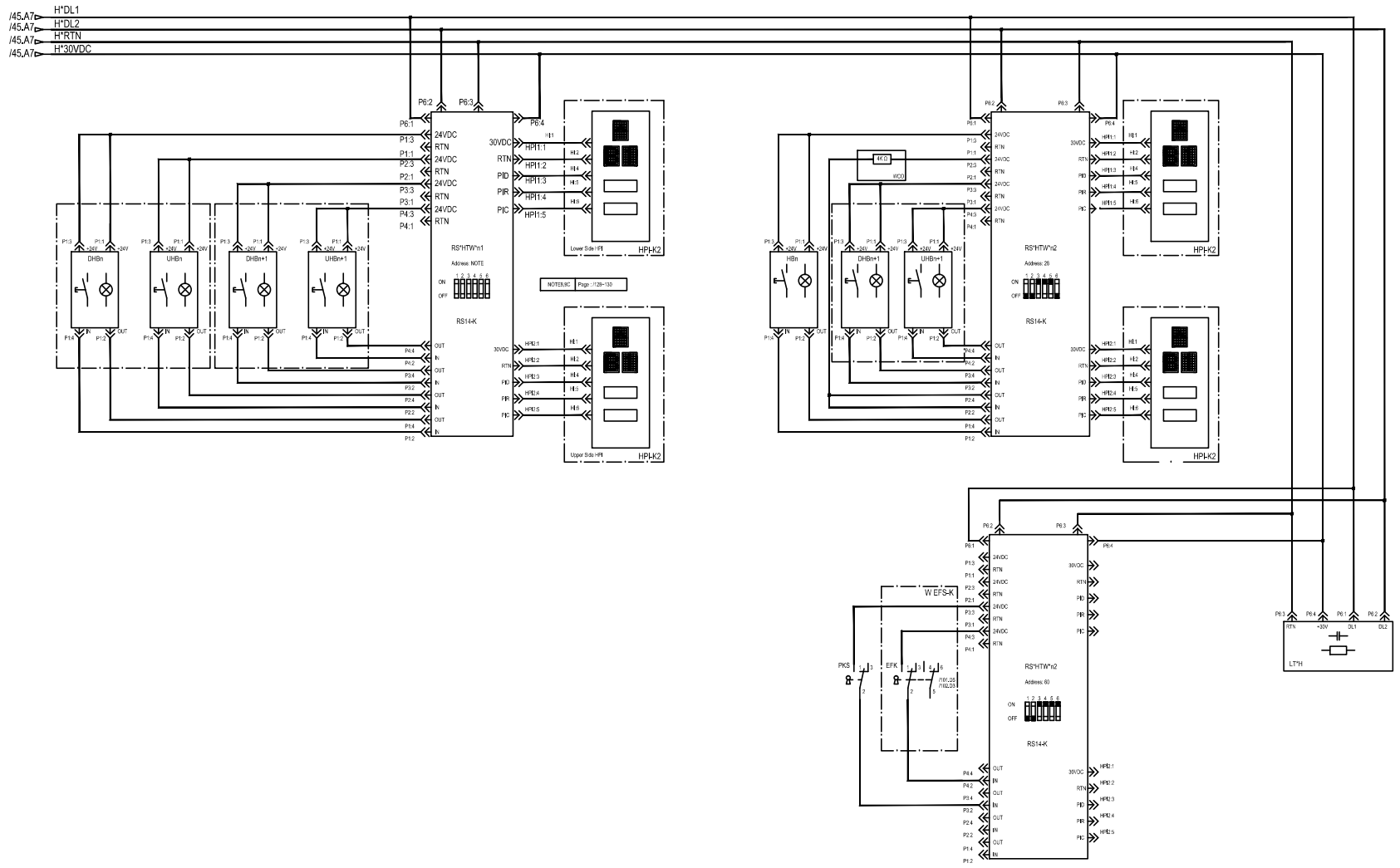

NOTE8,9C	Page : /128~130

Hall Fixture Configuration	2F1R(2Floor/1RS14)

For Korea

CHANGES

WARNING
THIS WORK AND THE INFORMATION IT CONTAINS ARE THE PROPERTY OF OTIS ELEVATOR COMPANY ("OTIS"), IT IS DELIVERED TO OTHERS ON THE EXPRESS CONDITION THAT IT WILL BE USED ONLY FOR OR ON BEHALF OF OTIS, THAT NEITHER IT NOR THE INFORMATION IT CONTAINS WILL BE REPRODUCED OR DISCLOSED, IN WHOLE OR IN PART, WITHOUT THE PRIOR WRITTEN CONSENT OF OTIS, AND THAT ON DEMAND IT AND ANY COPIES WILL BE PROMPTLY RETURNED TO OTIS.
UNPUBLISHED WORK. © ELEVATOR COMPANY
ALL RIGHTS RESERVED.

Otis
A United Technologies Company

Wiring Diagram
ACD4-MR

MATERIAL:
SPEC:
FINISH:

DWG	KAA21311AAF
	OTIS ENGINEERING CENTER SHANGHAI
DRAWN	JS YUN
CHK	DH PARK/DH RYU
APPD	JS LIM
AUTH	CN366761
ORIGINAL DATE	2014-04-08
SHEETS	150
SHEET	95

ALL DIMENSIONS METRIC

DRAFTED IN ACCORDANCE WITH OTIS DOCUMENT 52847

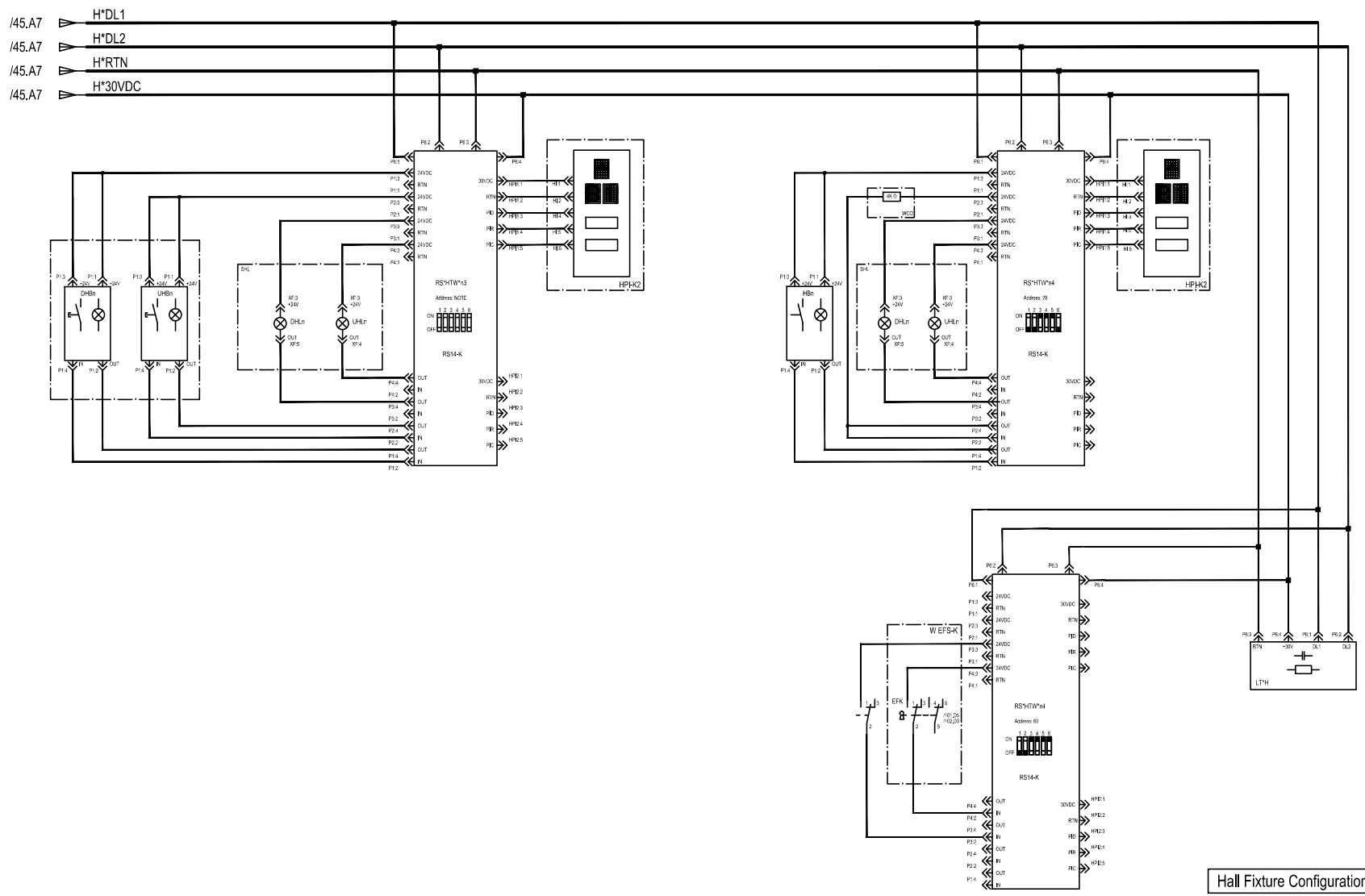

NOTE4~7C	Page : /125~128

Hall Fixture Configuration	1F1R(1Floor/1RS14)

CHANGES

WARNING

THIS WORK AND THE INFORMATION IT CONTAINS ARE THE PROPERTY OF OTIS ELEVATOR COMPANY ("OTIS") IT IS DELIVERED TO OTHERS ON THE EXPRESS CONDITION THAT IT WILL BE USED ONLY FOR, OR ON BEHALF OF, OTIS; THAT NEITHER IT NOR THE INFORMATION IT CONTAINS WILL BE REPRODUCED OR DISCLOSED, IN WHOLE OR IN PART, WITHOUT THE PRIOR WRITTEN CONSENT OF OTIS; AND THAT ON DEMAND IT AND ANY COPIES WILL BE PROMPTLY RETURNED TO OTIS.

UNPUBLISHED WORK. © ELEVATOR COMPANY
ALL RIGHTS RESERVED.

Otis
A United Technologies Company

Wiring Diagram
ACD4-MR

MATERIAL:

SPEC:

FINISH:

DWG	KAA21311AAF	
	OTIS ENGINEERING CENTER SHANGHAI	
DRAWN	JS YUN	ORIGINAL DATE 2014-04-08
CHK	DH PARK/DH RYU	
APPD	JS LIM	
AUTH	CN366761	150 SHEETS
		SHEET 97

ALL DIMENSIONS METRIC

DRAFTED IN ACCORDANCE WITH OTIS DOCUMENT 52847

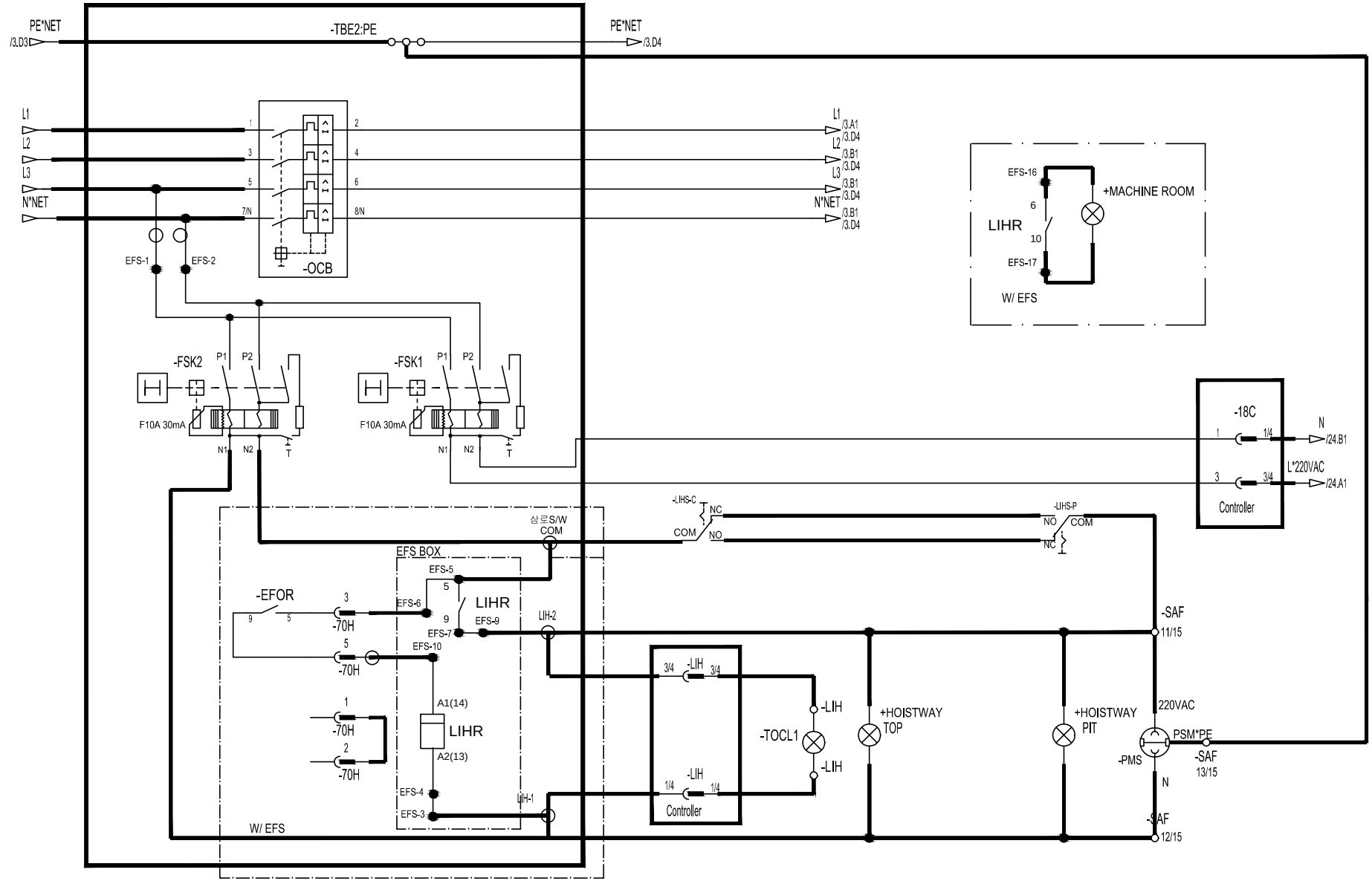

CHANGES

WARNING

THIS WORK AND THE INFORMATION IT CONTAINS ARE THE PROPERTY OF OTIS ELEVATOR COMPANY ("OTIS"), IT IS BELIEVED TO OTHERS ON THE EXPRESS CONDITION THAT IT WILL BE USED ONLY FOR OR ON BEHALF OF OTIS, THAT NEITHER IT NOR THE INFORMATION IT CONTAINS WILL BE REPRODUCED OR DISCLOSED, IN WHOLE OR IN PART, WITHOUT THE PRIOR WRITTEN CONSENT OF OTIS, AND THAT ON DEMAND IT AND ANY COPIES WILL BE PROMPTLY RETURNED TO OTIS.

UNPUBLISHED WORK. ALL RIGHTS RESERVED. © ELEVATOR COMPANY

Otis
A United Technologies Company

Wiring Diagram
ACD4-MR

MATERIAL:

SPEC:

FINISH:

DWG KAA21311AAF

OTIS ENGINEERING CENTER
SHANGHAI

DRAWN	JS YUN	ORIGINAL DATE
CHK	DH PARK/DH RYU	2014-04-08
APPD	JS LIM	
AUTH	CN366761	150 SHEETS
		SHEET 99

ALL DIMENSIONS METRIC

DRAFTED IN ACCORDANCE WITH OTIS DOCUMENT 52847

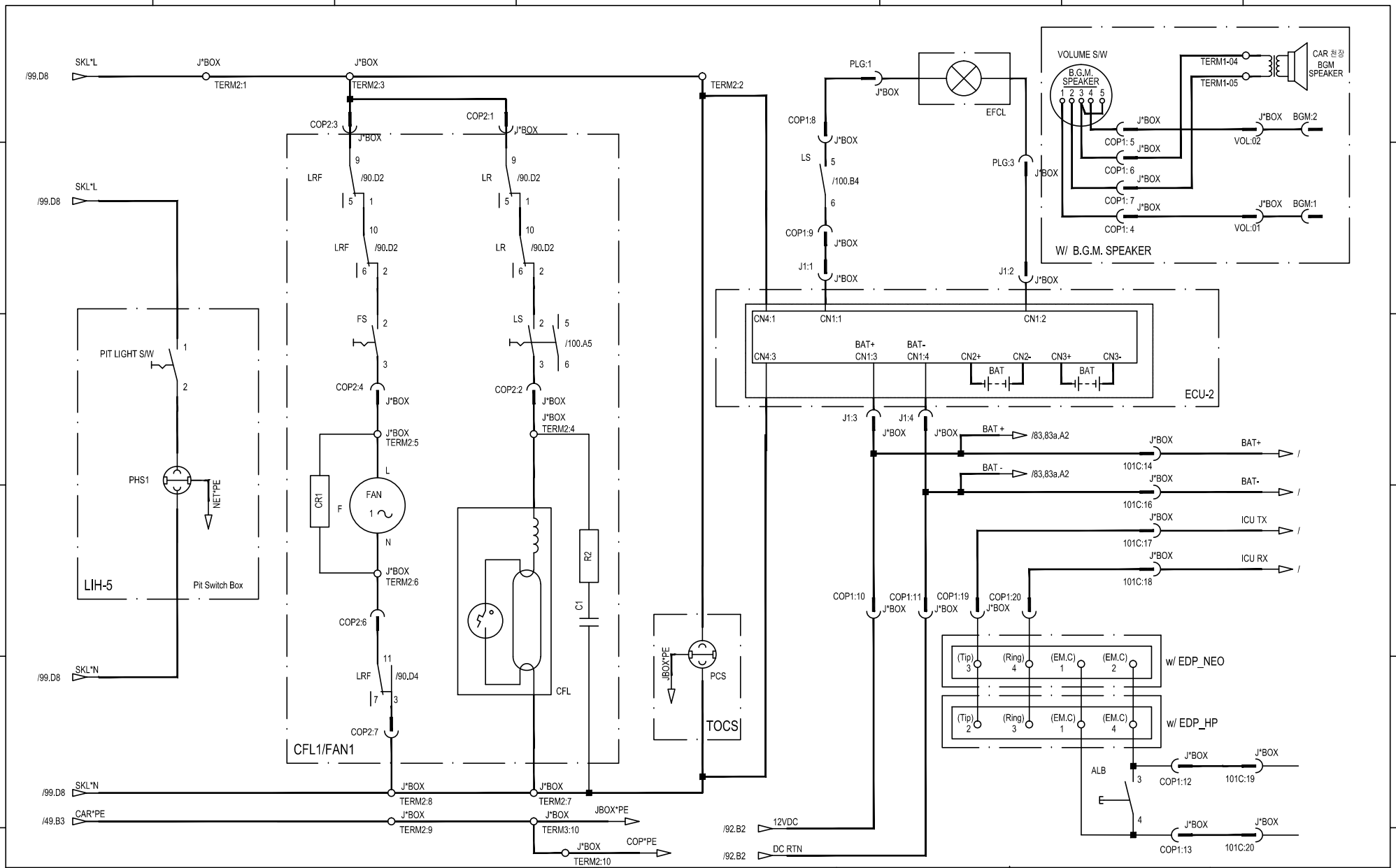

CHANGES

WARNING
THIS WORK AND THE INFORMATION IT CONTAINS ARE THE PROPERTY OF OTIS ELEVATOR COMPANY (OTIS) IT IS BELONGED TO OTHERS ON THE EXPRESS CONDITION THAT IT WILL BE USED ONLY FOR OR ON BEHALF OF OTIS THAT NEITHER IT NOR THE INFORMATION IT CONTAINS WILL BE REPRODUCED OR DISCLOSED, IN WHOLE OR IN PART, WITHOUT THE PRIOR WRITTEN CONSENT OF OTIS, AND THAT ON DEMAND IT AND ANY COPIES WILL BE PROMPTLY RETURNED TO OTIS.
UNPUBLISHED WORK. © ELEVATOR COMPANY
ALL RIGHTS RESERVED.

Otis
A United Technologies Company

Wiring Diagram
ACD4-MR

MATERIAL:
SPEC:
FINISH:

DWG KAA21311AAF
OTIS ENGINEERING CENTER
SHANGHAI

DRAWN	JS YUN	ORIGINAL DATE
CHK	DH PARK/DH RYU	2014-04-08
APPD	JS LIM	
AUTH	CN366761	150 SHEETS
		SHEET 100

ALL DIMENSIONS METRIC

DRAFTED IN ACCORDANCE WITH OTIS DOCUMENT 52847

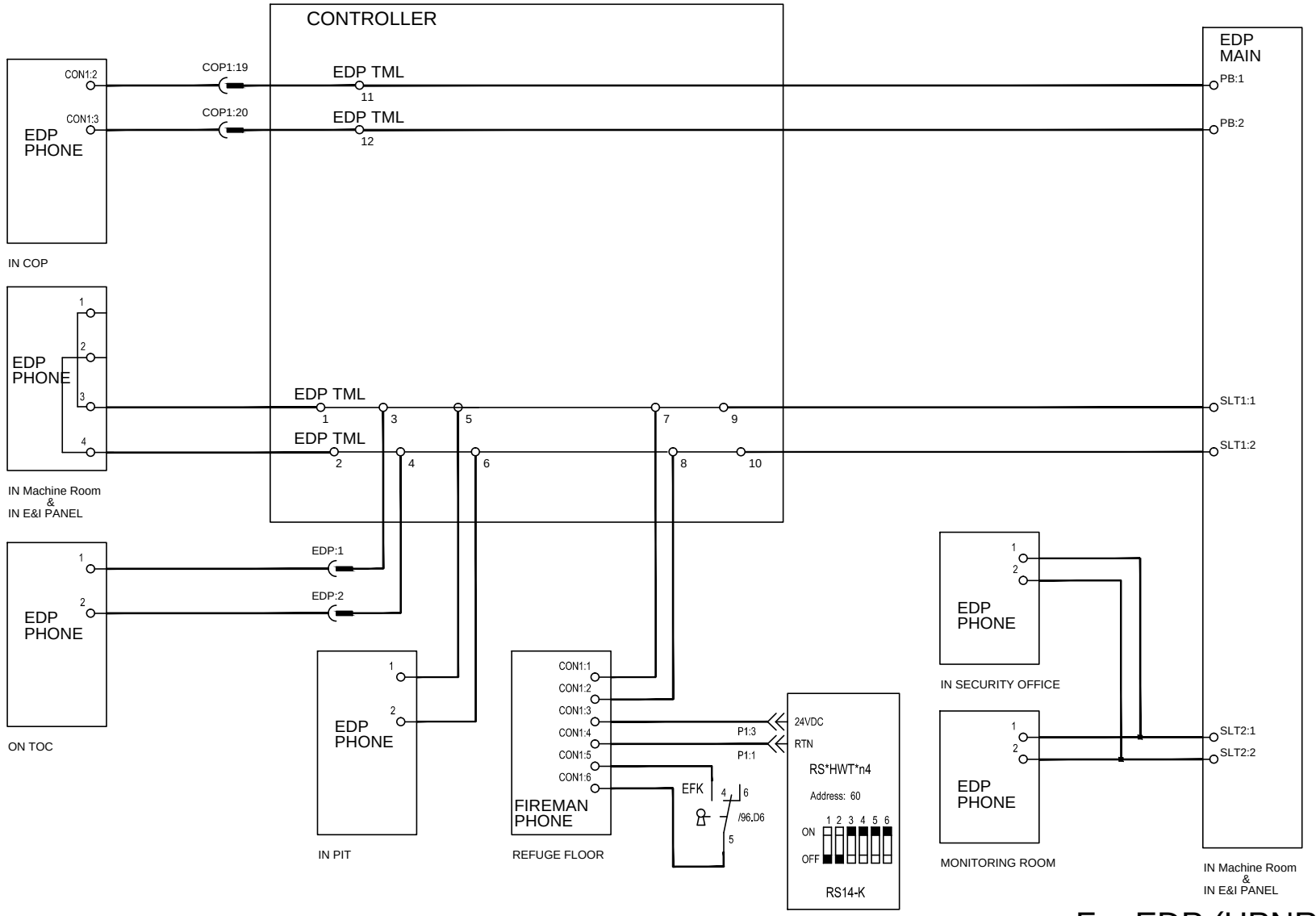

For EDP (HPNRT)

CHANGES

WARNING
THIS WORK AND THE INFORMATION IT CONTAINS ARE THE PROPERTY OF OTIS ELEVATOR COMPANY ("OTIS") IT IS DELIVERED TO OTHERS ON THE EXPRESS CONDITION THAT IT WILL BE USED ONLY FOR OR ON BEHALF OF OTIS THAT NEITHER IT NOR THE INFORMATION IT CONTAINS WILL BE REPRODUCED OR DISCLOSED, IN WHOLE OR IN PART, WITHOUT THE PRIOR WRITTEN CONSENT OF OTIS, AND THAT ON DEMAND IT AND ANY COPIES WILL BE PROMPTLY RETURNED TO OTIS.
UNPUBLISHED WORK. © ELEVATOR COMPANY
ALL RIGHTS RESERVED.

Otis
A United Technologies Company

Wiring Diagram
ACD4-MR

MATERIAL:
SPEC:
FINISH:

DWG KAA21311AAF
OTIS ENGINEERING CENTER
SHANGHAI

DRAWN	JS YUN	ORIGINAL DATE
CHK	DH PARK/DH RYU	2014-04-08
APPD	JS LIM	
AUTH	CN366761	150 SHEETS
		SHEET 101

ALL DIMENSIONS METRIC

DRAFTED IN ACCORDANCE WITH OTIS DOCUMENT 52847

General Information

Arrangment of magnetis and impulse detect - PRS2 with RPD-P3

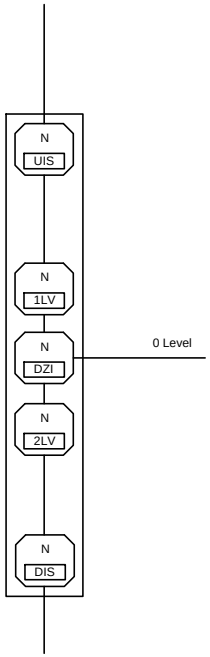

PRS

Signal	LOC.
1LV	/83.B3
2LV	/83.B5
1LS	/
2LS	/
UIS	/83.B6
DIS	/83.B7
DZI	/83.B1

General Information

Arrangment of 1LS, 2LS and UDLS Limit CAM.

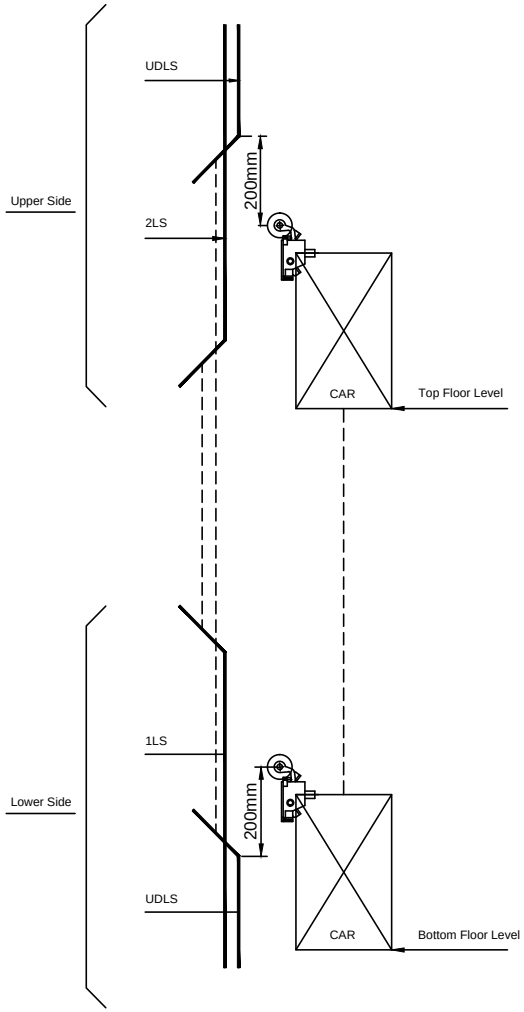

1LS/2LS Length Table.

VELOCITY [m/min]	ACCELERA [m/s²]	DIST. [mm] 1LS/2LS*
60 [1.0 mps]	0.6	940
90 [1.5 mps]	0.6	1880
105 [1.75 mps]	0.6	2440

CHANGES

WARNING
THIS WORK AND THE INFORMATION IT CONTAINS ARE THE PROPERTY OF OTIS ELEVATOR COMPANY ("OTIS"), IT IS DELIVERED TO OTHERS ON THE EXPRESS CONDITION THAT IT WILL BE USED ONLY FOR OR ON BEHALF OF OTIS, THAT NEITHER IT NOR THE INFORMATION IT CONTAINS WILL BE REPRODUCED OR DISCLOSED, IN WHOLE OR IN PART, WITHOUT THE PRIOR WRITTEN CONSENT OF OTIS, AND THAT ON DEMAND IT AND ANY COPIES WILL BE PROMPTLY RETURNED TO OTIS.
UNPUBLISHED WORK. © ELEVATOR COMPANY
ALL RIGHTS RESERVED.

Otis
A United Technologies Company

Wiring Diagram
ACD4-MR

MATERIAL:

SPEC:

FINISH:

DWG KAA21311AAF

OTIS ENGINEERING CENTER
SHANGHAI

DRAWN	JS YUN	ORIGINAL DATE
CHK	DH PARK/DH RYU	2014-04-08
APPD	JS LIM	
AUTH	CN366761	150 SHEETS
		SHEET 103

ALL DIMENSIONS METRIC

DRAFTED IN ACCORDANCE WITH OTIS DOCUMENT 52847

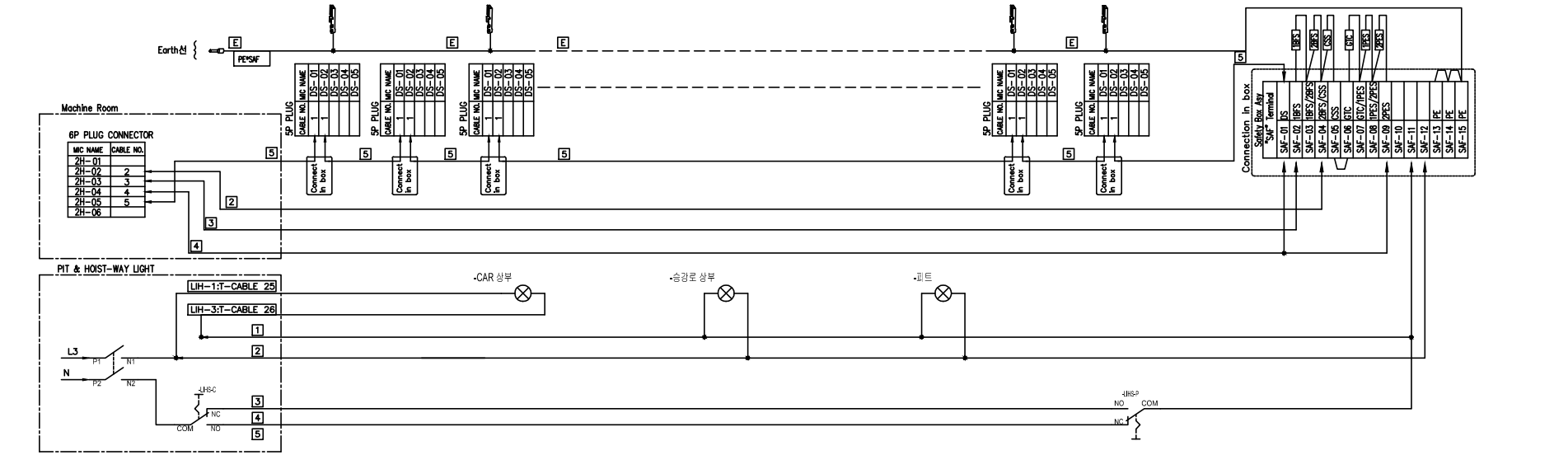

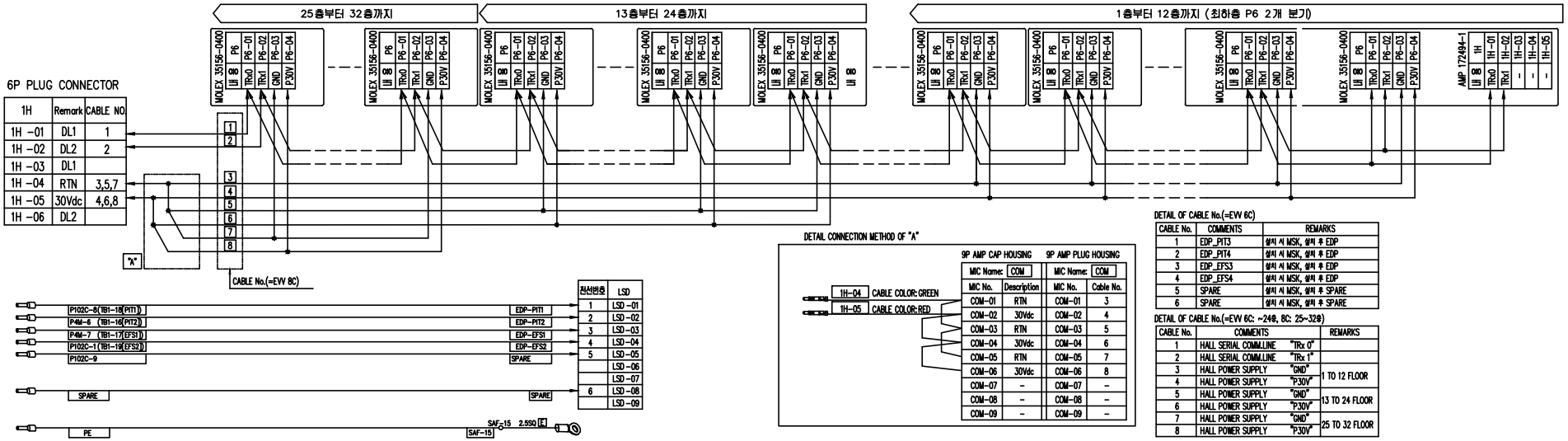

DETAIL CONNECTION METHOD OF "A"

9P AMP CAP HOUSING		9P AMP PLUG HOUSING	
MIC Name: COM		MIC Name: COM	
MIC No.	Description	MIC No.	Cable No.
COM-01	RTN	COM-01	3
COM-02	30Vdc	COM-02	4
COM-03	RTN	COM-03	5
COM-04	30Vdc	COM-04	6
COM-05	RTN	COM-05	7
COM-06	30Vdc	COM-06	8
COM-07	-	COM-07	-
COM-08	-	COM-08	-
COM-09	-	COM-09	-

DETAIL OF CABLE No.(=EVV 6C)

CABLE No.	COMMENTS	REMARKS
1	EDP_PIT3	설치 시 MSK, 설치 후 EDP
2	EDP_PIT4	설치 시 MSK, 설치 후 EDP
3	EDP_EFS3	설치 시 MSK, 설치 후 EDP
4	EDP_EFS4	설치 시 MSK, 설치 후 EDP
5	SPARE	설치 시 MSK, 설치 후 SPARE
6	SPARE	설치 시 MSK, 설치 후 SPARE

DETAIL OF CABLE No.(=EVV 6C: ~24#, 8C: 25~32#)

CABLE No.	COMMENTS		REMARKS
1	HALL SERIAL COMM.LINE	"TRx 0"	
2	HALL SERIAL COMM.LINE	"TRx 1"	
3	HALL POWER SUPPLY	"GND"	1 TO 12 FLOOR
4	HALL POWER SUPPLY	"P30V"	
5	HALL POWER SUPPLY	"GND"	13 TO 24 FLOOR
6	HALL POWER SUPPLY	"P30V"	
7	HALL POWER SUPPLY	"GND"	25 TO 32 FLOOR
8	HALL POWER SUPPLY	"P30V"	

CHANGES

WARNING
THIS WORK AND THE INFORMATION IT CONTAINS ARE THE PROPERTY OF OTIS ELEVATOR COMPANY ("OTIS") IT IS DELIVERED TO OTHERS ON THE EXPRESS CONDITION THAT IT WILL BE USED ONLY FOR OR ON BEHALF OF OTIS THAT NEITHER IT NOR THE INFORMATION IT CONTAINS WILL BE REPRODUCED OR DISCLOSED, IN WHOLE OR IN PART, WITHOUT THE PRIOR WRITTEN CONSENT OF OTIS, AND THAT ON DEMAND IT AND ANY COPIES WILL BE PROMPTLY RETURNED TO OTIS.
UNPUBLISHED WORK. © ELEVATOR COMPANY
ALL RIGHTS RESERVED.

Otis
A United Technologies Company

Wiring Diagram
ACD4-MR

MATERIAL:
SPEC:
FINISH:

DWG KAA21311AAF
OTIS ENGINEERING CENTER
SHANGHAI

DRAWN	JS YUN	ORIGINAL DATE	2014-04-08
CHK	DH PARK/DH RYU		
APPD	JS LIM		
AUTH	CN366761	150 SHEETS	
		SHEET 104	

ALL DIMENSIONS METRIC

DRAFTED IN ACCORDANCE WITH OTIS DOCUMENT 52847

Feature	Description	
	Aleternating current	AC 전원
	Direct Current	DC전원
	Rectified current	정류 전원
3 50 Hz	3-phase aleternating current 50Hz	정류 전원
	Earth	접지
	Chassis connection	외함 접지
	Protective earth	보호 접지
	Noise -free earth	차폐 접지
	Branch circuit	분기 회로
	Cross-over, without connection	교차 회로(접속되지 않는)
1 2	Plug 1 - Main 2 - Auxiliary	플러그
1 2	Socket 1 - Main 2 - Auxiliary	소켓
1 2	Plug and socket 1 - Main 2 - Auxiliary	플러그 & 소켓
-H1	Pilot light or illuminating lamp(1)	파일럿 램프
-H1	Bell	벨
-H1	Siren	싸이렌
-H1	Buzzer	버져
	Brake (General symbol)	솔레노이드 방식 브레이크
	Inverter (General symbol)	인버터
U1 V1 W1 M1 3	3-phase asynchronous motor with shor-circuited bars (squirrel cage)	3상 유도 전동기
	Conductor, control / auxiliary circuit	신호 라인

Feature	Description	
	Conductor, power / main circuit	전원 라인
L1 L2 L3	3-phase power network	삼상 전원 라인
	3-phase power network single-line representation	삼상 전원 라인
	Neutral conductor (N)	중성선
	Protective earth conductor (PE)	접지 라인
	Screeneed conductors	차폐선
	Twisted conductors	꼬임선
	N/O contact Main - Auxiliary	상시 개로
NO NC	Timed contacts, Delay on energisation	On 지연 타이머 접점
NO NC	Timed contacts, Delay de-energisation	Off 지연 타이머 접점
-K1	Coils	Relay/ Contactor Coil
	Isolators	개폐기
	Circuit breakers	차단기
	Automatic reset	자동 리턴 스위치 헤드
	Non-automatic reset	자기유지 스위치 헤드
	Mechanical interlock	기계적 인터록 헤드
-S1	Spring-return operator, pull-to-operate	스프링 리턴(당김시 on) 스위치 헤드
-S1	Spring-return operator, push-to-operate	스프링 리턴(누름시 on) 스위치 헤드
-S1	Rotary Operator, stayput	회전시 스위치 헤드
-S1	Emergency-stop operator	머쉬룸 타입 비상정지 스위치 헤드
-S1	Handwheel operator	핸드 휠 방식 스위치 헤드

Feature	Description	
-F1	Overcurrent relay with thermal operation	과전류 릴레이(열 동작형)
-F1	Maximum currnet relay	과전류 릴레이(전류 동작형)
-F1	Undervoltage relay	부족전압 릴레이(전압 동작형)
-S1	Proximity sensitive control	근접 센서
	Control activated by the close proximity of a magnet	마그네틱 동작형 근접 센서
-F	Fuse	퓨즈
-V	Diode	다이오우드
	Full-wave bridge rectifier standard symbol - Simplified symbol	브리지 정류기
-C	Capacitor	콘덴서
-R	Resistor	저항기
-L	Inductance	인덕터
-R	Potentiometer	가변 저항기
-R	Temperature-dependent resistor (varistor)	바리스터
	Photodiode	포토 다이오우드

CHANGES

WARNING
THIS WORK AND THE INFORMATION IT CONTAINS ARE THE PROPERTY OF OTIS ELEVATOR COMPANY ("OTIS"), IT IS BE LENDER TO OTHERS ON THE EXPRESS CONDITION THAT IT WILL BE USED ONLY FOR OR ON BEHALF OF OTIS, THAT NEITHER IT NOR THE INFORMATION IT CONTAINS WILL BE REPRODUCED OR DISCLOSED, IN WHOLE OR IN PART, WITHOUT THE PRIOR WRITTEN CONSENT OF OTIS, AND THAT ON DEMAND IT AND ANY COPIES WILL BE PROMPTLY RETURNED TO OTIS.
UNPUBLISHED WORK. © ELEVATOR COMPANY
ALL RIGHTS RESERVED.

Otis
A United Technologies Company

Wiring Diagram
ACD4-MR

MATERIAL:
SPEC:
FINISH:

DWG KAA21311AAF
OTIS ENGINEERING CENTER
SHANGHAI

DRAWN	JS YUN	ORIGINAL DATE 2014-04-08
CHK	DH PARK/DH RYU	
APPD	JS LIM	
AUTH	CN366761	150 SHEETS
		SHEET 111

ALL DIMENSIONS METRIC

DRAFTED IN ACCORDANCE WITH OTIS DOCUMENT 52847

PC-BOARD: PM DOOR CONTROLLER (IMS-DS20P2C)

PINNAME	SIGNAL / MARKING	LOC.
	24V	/43.D6
	COM	
	ΦA	
	ΦB	
	X1	
XC	+24V	/47.B1
X1	ST1	/47.C5
X2	ST2	/47.C6
X3	ST3	/47.C6
X4	REV	/47.C4
M7	SGS	/48.B3
MC	+24V	/47.B1
M1	DOL(NO)	
M2	DOL(NC)	/47.D1
M3	DCL(NO)	
M4	DCL(NC)	
M5	OBSTRUCTION(NO)	
M6	OBSTRUCTION(NC)	
M7	/SGS	/48.B3
M8	SES_COMM	/48.B2
AC1	110VAC	/43.B5
⏚	PE	
AC2	N	
U	U	/43.C6
V	V	
W	W	

Signal Descriptions of 3-Wire Interface.

No.	Command	Description	Signal		
			ST1(IO:991/994)	ST2(IO:992/995)	ST3(IO:993/996)
1	OPN	Opening Command	ON (0 Vdc)	ON (0 Vdc)	ON (0 Vdc)
			ON (0 Vdc)	ON (0 Vdc)	OFF (24 Vdc)
2	CLD	Door Closing Command	OFF (24 Vdc)	ON (0 Vdc)	ON (0 Vdc)
			OFF (24 Vdc)	ON (0 Vdc)	OFF (24 Vdc)
3	CLD & REV	Door Closing Command, Reversal device, PP and DOB Active	ON (0 Vdc)	OFF (24 Vdc)	ON (0 Vdc)
4	NDG	Nudging Command, Reversal device, PP and DOB in-active	ON (0 Vdc)	OFF (24 Vdc)	OFF (24 Vdc)
5	DED	DCSS deenergized, SVT inspection run prohibited	OFF (24 Vdc)	OFF (24 Vdc)	ON (0 Vdc)
6	DED & EDS		OFF (24 Vdc)	OFF (24 Vdc)	OFF (24 Vdc)

LED Name.	Status	Description
POWER	◉	DC-Link and Power Status is Normal
OPEND	◉	OLS signal is received.
CLOSED	◉	CLS signal is received.
OBSTRUCTION		N.A
READY/ERROR	◉	SGS bypass signal is received.

◉ : Turn On ◎ : Turn Off

CHANGES

WARNING
THIS WORK AND THE INFORMATION IT CONTAINS ARE THE PROPERTY OF OTIS ELEVATOR COMPANY ("OTIS"), IT IS DELIVERED TO OTHERS ON THE EXPRESS CONDITION THAT IT WILL BE USED ONLY FOR OR ON BEHALF OF OTIS, THAT NEITHER IT NOR THE INFORMATION IT CONTAINS WILL BE REPRODUCED OR DISCLOSED, IN WHOLE OR IN PART, WITHOUT THE PRIOR WRITTEN CONSENT OF OTIS, AND THAT ON DEMAND IT AND ANY COPIES WILL BE PROMPTLY RETURNED TO OTIS.

UNPUBLISHED WORK. © ELEVATOR COMPANY
ALL RIGHTS RESERVED.

Otis
A United Technologies Company

Wiring Diagram
ACD4-MR

MATERIAL:

SPEC:
FINISH:

DWG KAA21311AAF
OTIS ENGINEERING CENTER
SHANGHAI

DRAWN	JS YUN	ORIGINAL DATE 2014-04-08
CHK	DH PARK/DH RYU	
APPD	JS LIM	
AUTH	CN366761	150 SHEETS
		SHEET 119

ALL DIMENSIONS METRIC

DRAFTED IN ACCORDANCE WITH OTIS DOCUMENT 52847

GENERAL INFORMATION
Connectors of Remote Stations

KAA26800ABD

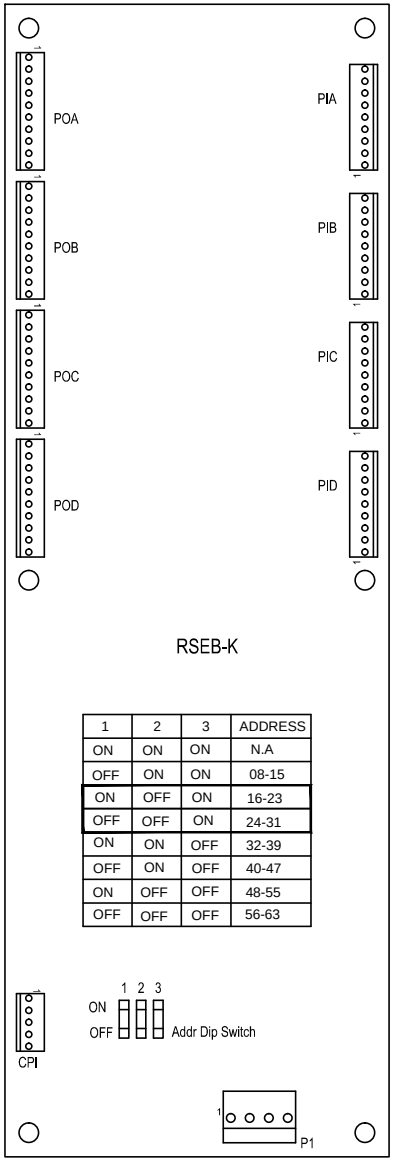

1	2	3	ADDRESS
ON	ON	ON	N.A
OFF	ON	ON	08-15
ON	OFF	ON	16-23
OFF	OFF	ON	24-31
ON	ON	OFF	32-39
OFF	ON	OFF	40-47
ON	OFF	OFF	48-55
OFF	OFF	OFF	56-63

P1	RSL LINK	1	L1
		2	L2
		3	RTN
		4	+30VDC
CPI	FOR CPI	1	+30VDC
		2	GND
		3	S_DATA
		4	4V_REF
		5	S_CLK

PIA,PIB,PIC,PID	
1	IN (P1)
2	IN (P2)
3	IN (P3)
4	IN (P4)
5	IN (P1)
6	IN (P2)
7	IN (P3)
8	IN (P4)
9	+24VDC

POA,POB,POC,POD	
1	OUT (P1)
2	OUT (P2)
3	OUT (P3)
4	OUT (P4)
5	OUT (P1)
6	OUT (P2)
7	OUT (P3)
8	OUT (P4)
9	+24VDC
10	RTN

CHANGES

WARNING
THIS WORK AND THE INFORMATION IT CONTAINS ARE THE PROPERTY OF OTIS ELEVATOR COMPANY ("OTIS") OF BE DELIVERED TO OTHERS ON THE EXPRESS CONDITION THAT IT WILL BE USED ONLY FOR OR ON BEHALF OF OTIS THAT NEITHER IT NOR THE INFORMATION IT CONTAINS WILL BE REPRODUCED OR DISCLOSED, IN WHOLE OR IN PART, WITHOUT THE PRIOR WRITTEN CONSENT OF OTIS, AND THAT ON DEMAND IT AND ANY COPIES WILL BE PROMPTLY RETURNED TO OTIS.
UNPUBLISHED WORK. © ELEVATOR COMPANY
ALL RIGHTS RESERVED.

Otis
A United Technologies Company

Wiring Diagram
ACD4-MR

MATERIAL:
SPEC:
FINISH:

DWG KAA21311AAF
OTIS ENGINEERING CENTER
SHANGHAI

DRAWN	JS YUN	ORIGINAL DATE 2014-04-08
CHK	DH PARK/DH RYU	
APPD	JS LIM	
AUTH	CN366761	150 SHEETS
		SHEET 120

ALL DIMENSIONS METRIC

DRAFTED IN ACCORDANCE WITH OTIS DOCUMENT 52847

GENERAL INFORMATION

Switch settings / configuration SW1

Remote station RS14

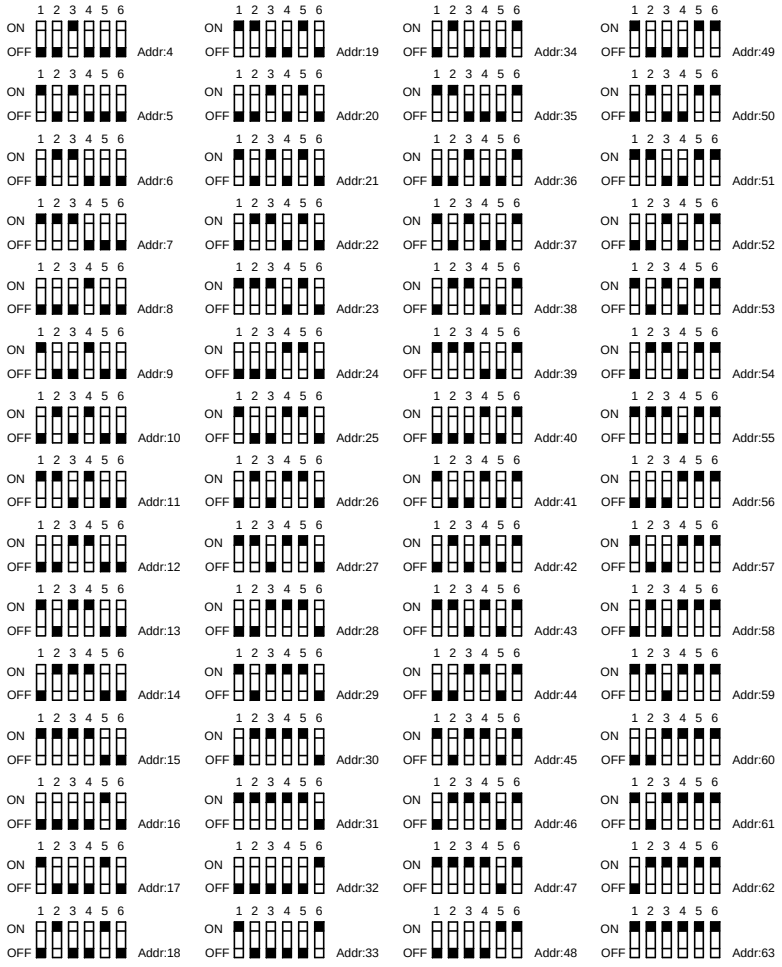

Jumper seting configuration

Remote station RS4 - RS4A - RS4R

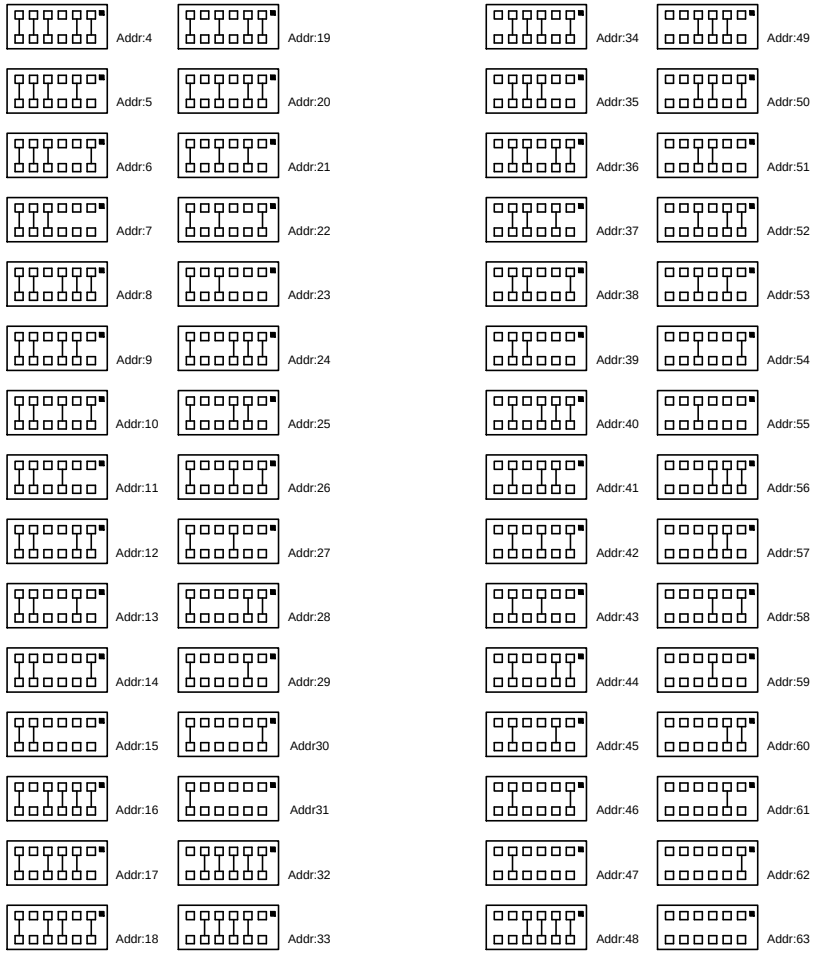

CHANGES

WARNING
THIS WORK AND THE INFORMATION IT CONTAINS ARE THE PROPERTY OF OTIS ELEVATOR COMPANY (OTIS) AND TO BE DELIVERED TO OTHERS ON THE EXPRESS CONDITION THAT IT WILL BE USED ONLY FOR OR ON BEHALF OF OTIS, THAT NEITHER IT NOR THE INFORMATION IT CONTAINS WILL BE REPRODUCED OR DISCLOSED, IN WHOLE OR IN PART, WITHOUT THE PRIOR WRITTEN CONSENT OF OTIS, AND THAT ON DEMAND IT AND ANY COPIES WILL BE PROMPTLY RETURNED TO OTIS.

UNPUBLISHED WORK. © ELEVATOR COMPANY
ALL RIGHTS RESERVED.

Otis
A United Technologies Company

Wiring Diagram
ACD4-MR

MATERIAL:

SPEC:

FINISH:

DWG KAA21311AAF

OTIS ENGINEERING CENTER
SHANGHAI

DRAWN	JS YUN	ORIGINAL DATE
CHK	DH PARK/DH RYU	2014-04-08
APPD	JS LIM	
AUTH	CN366761	150 SHEETS
		SHEET 121

ALL DIMENSIONS METRIC

DRAFTED IN ACCORDANCE WITH OTIS DOCUMENT 52847

Standard I/O List
Software Version :

NOTE1C

Input

Location : COP , CAR
Remarks : Front Door

Symbol	Description	Addr.	RS-EB Pin	RS-14 Pin	I/O	Revision Orig	1 NO.	2 NO.	Page :
		4-1		P1:2	--				
DOL	Door Open Limit	4-2		P2:2	0				
		4-3		P3:2	--				
		4-4		P4:2	--				
SGS2	Secondary Safety Gate Shoe	5-1		P1:2	1155				
TCI	Top of car inspection Switch	5-2		P2:2	691				
TDOB	Top of car DOB	5-3		P3:2	705				
TDCB	Top of car DCB	5-4		P4:2	706				
		6-1		P1:2	--				
RDOL	Rear Door Open Limit	6-2		P2:2	544				
		6-3		P3:2	--				
RDOB	Rear Door Open Button	6-4		P4:2	545				
RSGS2	Secondary Rear Safety Gate Shoe	7-1		P1:2	1156				
		7-2		P2:2	--				
RTDOB	Rear Top of car DOB	7-3		P3:2	707				
RTDCB	Rear Top of car DCB	7-4		P4:2	708				
ISS	Independent Service Switch	8-1	PIA:1		4				
DCB	Door Close Button	8-2	PIA:2		3				
ATK	Attendant Key Switch	8-3	PIA:3		548				
ATTU	Attendant Up Start Switch	8-4	PIA:4		590				
ATTD	Attendant Dn Start Switch	9-1	PIA:5		591				
DHB	Door Hold Button	9-2	PIA:6		620				
NSB	Non Stop Button(pass)	9-3	PIA:7		594				
		9-4	PIA:8		--				
		10-1	PIB:1		--				
		10-2	PIB:2		--				
DOB	Door Open Button	10-3	PIB:3		1				
		10-4	PIB:4		--				
CB/CTTL0	Car Button / Tell Tale Light 0	11-1	PIB:5		32				
CB/CTTL1	Car Button / Tell Tale Light 1	11-2	PIB:6		33				
CB/CTTL2	Car Button / Tell Tale Light 2	11-3	PIB:7		34				
CB/CTTL3	Car Button / Tell Tale Light 3	11-4	PIB:8		35				

Date: 05-11-2009

Please fill in

Standard I/O List
Software Version :

NOTE1C

Output

Location: COP , CAR
Remarks: Front Door

Symbol	Description	Addr.	RS-EB Pin	RS-14 Pin	I/O	Revision Orig	1 NO.	2 NO.	Page :
ST1	ST1 for FRONT	4-1		P1:4	991				
ST2	ST2 for FRONT	4-2		P2:4	992				
ST3	ST3 for FRONT	4-3		P3:4	993				
		4-4		P4:4	--				
		5-1		P1:4	--				
		5-2		P2:4	--				
		5-3		P3:4	--				
		5-4		P4:4	--				
ST1R	ST1 for REAR	6-1		P1:4	994				
ST2R	ST2 for REAR	6-2		P2:4	995				
ST3R	ST3 for REAR	6-3		P3:4	996				
		6-4		P4:4	--				
		7-1		P1:4	--				
		7-2		P2:4	--				
		7-3		P3:4	--				
		7-4		P4:4	--				
DOBL	Door Open Button Lamp	8-1	POA:1		1108				
DCBL	Door Close Button Lamp	8-2	POA:2		1109				
BUZ	Buzzer	8-3	POA:3		23				
CDGU	Car direction GONG UP	8-4	POA:4		580				
CDGD	Car direction GONG Down	9-1	POA:5		581				
DHBL	Door Hold button	9-2	POA:6		747				
		9-3	POA:7		--				
CBT	Car Button Tone	9-4	POA:8		671				
LR	LIGHT Relay	10-1	POB:1		26				
FANR	FAN Relay	10-2	POB:2		1089				
OLS	Over Load Signal	10-3	POB:3		22				
FSL	Fireman Service Light	10-4	POB:4		24				
CB/CTTL0	Car Button / Tell Tale Light 0	11-1	POB:5		32				
CB/CTTL1	Car Button / Tell Tale Light 1	11-2	POB:6		33				
CB/CTTL2	Car Button / Tell Tale Light 2	11-3	POB:7		34				
CB/CTTL3	Car Button / Tell Tale Light 3	11-4	POB:8		35				

Date: 05-11-2009

Please fill in

For Korea

CHANGES

WARNING
THIS WORK AND THE INFORMATION IT CONTAINS ARE THE PROPERTY OF OTIS ELEVATOR COMPANY (OTIS) IT IS DELIVERED TO OTHERS ON THE EXPRESS CONDITION THAT IT WILL BE USED ONLY FOR OR ON BEHALF OF OTIS THAT NEITHER IT NOR THE INFORMATION IT CONTAINS WILL BE REPRODUCED OR DISCLOSED, IN WHOLE OR IN PART, WITHOUT THE PRIOR WRITTEN CONSENT OF OTIS, AND THAT ON DEMAND IT AND ANY COPIES WILL BE PROMPTLY RETURNED TO OTIS.

UNPUBLISHED WORK. © ELEVATOR COMPANY
ALL RIGHTS RESERVED.

Otis
A United Technologies Company

Wiring Diagram
ACD4-MR

MATERIAL:

SPEC:
FINISH:

DWG KAA21311AAF
OTIS ENGINEERING CENTER
SHANGHAI

DRAWN JS YUN
CHK DH PARK/DH RYU
APPD JS LIM
AUTH CN366761

ORIGINAL DATE
2014-04-08

150 SHEETS
SHEET 122

ALL DIMENSIONS METRIC

DRAFTED IN ACCORDANCE WITH OTIS DOCUMENT 52847

Standard I/O List
Software Version :

NOTE2C

Input

Location : COP , CAR
Remarks : Front Door

Symbol	Description	Addr.	RS-EB Pin	RS-14 Pin	I/O	Revision Orig	1 NO.	2 NO.	Page :
CB/CTTL4	Car Button / Tell Tale Light 4	12-1	PIC:1		36				
CB/CTTL5	Car Button / Tell Tale Light 5	12-2	PIC:2		37				
CB/CTTL6	Car Button / Tell Tale Light 6	12-3	PIC:3		38				
CB/CTTL7	Car Button / Tell Tale Light 7	12-4	PIC:4		39				
CB/CTTL8	Car Button / Tell Tale Light 8	13-1	PIC:5		40				
CB/CTTL9	Car Button / Tell Tale Light 9	13-2	PIC:6		41				
CB/CTTL10	Car Button / Tell Tale Light 10	13-3	PIC:7		42				
CB/CTTL11	Car Button / Tell Tale Light 11	13-4	PIC:8		43				
CB/CTTL12	Car Button / Tell Tale Light 12	14-1	PID:1		44				
CB/CTTL13	Car Button / Tell Tale Light 13	14-2	PID:2		45				
CB/CTTL14	Car Button / Tell Tale Light 14	14-3	PID:3		46				
CB/CTTL15	Car Button / Tell Tale Light 15	14-4	PID:4		47				
CB/CTTL16	Car Button / Tell Tale Light 16	15-1	PID:5		48				
CB/CTTL17	Car Button / Tell Tale Light 17	15-2	PID:6		49				
CB/CTTL18	Car Button / Tell Tale Light 18	15-3	PID:7		50				
CB/CTTL19	Car Button / Tell Tale Light 19	15-4	PID:8		51				
CB/CTTL20	Car Button / Tell Tale Light 20	16-1		P1:2	52				
CB/CTTL21	Car Button / Tell Tale Light 21	16-2		P2:2	53				
CB/CTTL22	Car Button / Tell Tale Light 22	16-3		P3:2	54				
CB/CTTL23	Car Button / Tell Tale Light 23	16-4		P4:2	55				
CB/CTTL24	Car Button / Tell Tale Light 24	17-1		P1:2	56				
CB/CTTL25	Car Button / Tell Tale Light 25	17-2		P2:2	57				
CB/CTTL26	Car Button / Tell Tale Light 26	17-3		P3:2	58				
CB/CTTL27	Car Button / Tell Tale Light 27	17-4		P4:2	59				
CB/CTTL28	Car Button / Tell Tale Light 28	18-1		P1:2	60				
CB/CTTL29	Car Button / Tell Tale Light 29	18-2		P2:2	61				
CB/CTTL30	Car Button / Tell Tale Light 30	18-3		P3:2	62				
CB/CTTL31	Car Button / Tell Tale Light 31	18-4		P4:2	63				
		19-1		P1:2	–				
		19-2		P2:2	–				
		19-3		P3:2	–				
		19-4		P4:2	–				

Date: 05-11-2009

Please fill in

Standard I/O List
Software Version :

NOTE2C

Output

Location: COP , CAR
Remarks: Front Door

Symbol	Description	Addr.	RS-EB Pin	RS-14 Pin	I/O	Revision Orig	1 NO.	2 NO.	Page :
CB/CTTL4	Car Button / Tell Tale Light 4	12-1	POB:1		36				
CB/CTTL5	Car Button / Tell Tale Light 5	12-2	POB:2		37				
CB/CTTL6	Car Button / Tell Tale Light 6	12-3	POB:3		38				
CB/CTTL7	Car Button / Tell Tale Light 7	12-4	POB:4		39				
CB/CTTL8	Car Button / Tell Tale Light 8	13-1	POC:5		40				
CB/CTTL9	Car Button / Tell Tale Light 9	13-2	POC:6		41				
CB/CTTL10	Car Button / Tell Tale Light 10	13-3	POC:7		42				
CB/CTTL11	Car Button / Tell Tale Light 11	13-4	POC:8		43				
CB/CTTL12	Car Button / Tell Tale Light 12	14-1	POC:1		44				
CB/CTTL13	Car Button / Tell Tale Light 13	14-2	POC:2		45				
CB/CTTL14	Car Button / Tell Tale Light 14	14-3	POC:3		46				
CB/CTTL15	Car Button / Tell Tale Light 15	14-4	POC:4		47				
CB/CTTL16	Car Button / Tell Tale Light 16	15-1	POC:5		48				
CB/CTTL17	Car Button / Tell Tale Light 17	15-2	POC:6		49				
CB/CTTL18	Car Button / Tell Tale Light 18	15-3	POC:7		50				
CB/CTTL19	Car Button / Tell Tale Light 19	15-4	POC:8		51				
CB/CTTL20	Car Button / Tell Tale Light 20	16-1		P1:4	52				
CB/CTTL21	Car Button / Tell Tale Light 21	16-2		P2:4	53				
CB/CTTL22	Car Button / Tell Tale Light 22	16-3		P3:4	54				
CB/CTTL23	Car Button / Tell Tale Light 23	16-4		P4:4	55				
CB/CTTL24	Car Button / Tell Tale Light 24	17-1		P1:4	56				
CB/CTTL25	Car Button / Tell Tale Light 25	17-2		P2:4	57				
CB/CTTL26	Car Button / Tell Tale Light 26	17-3		P3:4	58				
CB/CTTL27	Car Button / Tell Tale Light 27	17-4		P4:4	59				
CB/CTTL28	Car Button / Tell Tale Light 28	18-1		P1:4	60				
CB/CTTL29	Car Button / Tell Tale Light 29	18-2		P2:4	61				
CB/CTTL30	Car Button / Tell Tale Light 30	18-3		P3:4	62				
CB/CTTL31	Car Button / Tell Tale Light 31	18-4		P4:4	63				
NSL	Non Stop Lantern	19-1		P1:4	595				
CPMT	Car Position Message Trigger	19-2		P2:4	947				
EPR	Emergency Power Rescue	19-3		P3:4	556				
EQL	Earthquake Light	19-4		P4:4	738				

Date: 05-11-2009

Please fill in

CHANGES

WARNING
THIS WORK AND THE INFORMATION IT CONTAINS ARE THE PROPERTY OF OTIS ELEVATOR COMPANY (OTIS). IT IS DELIVERED TO OTHERS ON THE EXPRESS CONDITION THAT IT WILL BE USED ONLY FOR, OR ON BEHALF OF OTIS; THAT NEITHER IT NOR THE INFORMATION IT CONTAINS WILL BE REPRODUCED OR DISCLOSED, IN WHOLE OR IN PART, WITHOUT THE PRIOR WRITTEN CONSENT OF OTIS, AND THAT ON DEMAND IT AND ANY COPIES WILL BE PROMPTLY RETURNED TO OTIS.
UNPUBLISHED WORK. © ELEVATOR COMPANY
ALL RIGHTS RESERVED.

Otis
A United Technologies Company

Wiring Diagram
ACD4-MR

MATERIAL:
SPEC:
FINISH:

DWG KAA21311AAF
OTIS ENGINEERING CENTER
SHANGHAI

DRAWN JS YUN
CHK DH PARK/DH RYU
APPD JS LIM
AUTH CN366761

ORIGINAL DATE
2014-04-08

150 SHEETS
SHEET 123

ALL DIMENSIONS METRIC

DRAFTED IN ACCORDANCE WITH OTIS DOCUMENT 52847

Standard I/O List NOTE3C

Software Version :

Input

Location : COP , CAR

Remarks : Front Door

Symbol	Description	Addr.	RS-EB Pin	RS-14 Pin	I/O	Revision Orig	1 NO.	2 NO.	Page :
		20-1		P1:2	--				
		20-2		P2:2	--				
DEMERC	Disable Emergency Relay Contact	20-3		P3:2	971				
DDSRC	Disable DS Relay Contact	20-4		P4:2	970				
		21-1		P1:2	--				
		21-2		P2:2	--				
		21-3		P3:2	--				
		21-4		P4:2	--				
		22-1		P1:2	--				
		22-2		P2:2	--				
		22-3		P3:2	--				
		22-4		P4:2	--				
		23-1		P1:2	--				
RDCB	Rear Door Close Button	23-2		P2:2	547				
RDHB	Rear Door Hold Button	23-3		P3:2	628				
		23-4		P4:2	--				
RCB/RCTTL0	Rear Car Button / Tell Tale Light 0	24-1		P1:2	288				
RCB/RCTTL1	Rear Car Button / Tell Tale Light 1	24-2		P2:2	289				
RCB/RCTTL2	Rear Car Button / Tell Tale Light 2	24-3		P3:2	290				
RCB/RCTTL3	Rear Car Button / Tell Tale Light 3	24-4		P4:2	291				
RCB/RCTTL4	Rear Car Button / Tell Tale Light 4	25-1		P1:2	292				
RCB/RCTTL5	Rear Car Button / Tell Tale Light 5	25-2		P2:2	293				
RCB/RCTTL6	Rear Car Button / Tell Tale Light 6	25-3		P3:2	294				
RCB/RCTTL7	Rear Car Button / Tell Tale Light 7	25-4		P4:2	295				
RCB/RCTTL8	Rear Car Button / Tell Tale Light 8	26-1		P1:2	296				
RCB/RCTTL9	Rear Car Button / Tell Tale Light 9	26-2		P2:2	297				
RCB/RCTTL10	Rear Car Button / Tell Tale Light 10	26-3		P3:2	298				
RCB/RCTTL11	Rear Car Button / Tell Tale Light 11	26-4		P4:2	299				
RCB/RCTTL12	Rear Car Button / Tell Tale Light 12	27-1		P1:2	300				
RCB/RCTTL13	Rear Car Button / Tell Tale Light 13	27-2		P2:2	301				
RCB/RCTTL14	Rear Car Button / Tell Tale Light 14	27-3		P3:2	302				
RCB/RCTTL15	Rear Car Button / Tell Tale Light 15	27-4		P4:2	303				

Date: 05-11-2009

Please fill in

Standard I/O List NOTE3C

Software Version :

Output

Location: COP , CAR

Remarks: Front Door

Symbol	Description	Addr.	RS-EB Pin	RS-14 Pin	I/O	Revision Orig	1 NO.	2 NO.	Page :
DDSR1	Disable DS Relay	20-1		P1:4	811				
DDSR2	Disable SGS Relay	20-2		P2:4	974				
DEECR	Disable EEC Relay	20-3		P3:4	812				
DESBR	Disable ESB Relay	20-4		P4:4	810				
		21-1		P1:4	--				
		21-2		P2:4	--				
		21-3		P3:4	--				
		21-4		P4:4	--				
		22-1		P1:4	--				
		22-2		P2:4	--				
		22-3		P3:4	--				
		22-4		P4:4	--				
RDOBL	Rear Door Open Button Light	23-1		P1:4	1110				
RDCBL	Rear Door Close Button Light	23-2		P2:4	1111				
RDHBL	Rear Door Hold Button Light	23-3		P3:4	748				
		23-4		P4:4	--				
RCB/RCTTL0	Rear Car Button / Tell Tale Light 0	24-1		P1:4	288				
RCB/RCTTL1	Rear Car Button / Tell Tale Light 1	24-2		P2:4	289				
RCB/RCTTL2	Rear Car Button / Tell Tale Light 2	24-3		P3:4	290				
RCB/RCTTL3	Rear Car Button / Tell Tale Light 3	24-4		P4:4	291				
RCB/RCTTL4	Rear Car Button / Tell Tale Light 4	25-1		P1:4	292				
RCB/RCTTL5	Rear Car Button / Tell Tale Light 5	25-2		P2:4	293				
RCB/RCTTL6	Rear Car Button / Tell Tale Light 6	25-3		P3:4	294				
RCB/RCTTL7	Rear Car Button / Tell Tale Light 7	25-4		P4:4	295				
RCB/RCTTL8	Rear Car Button / Tell Tale Light 8	26-1		P1:4	296				
RCB/RCTTL9	Rear Car Button / Tell Tale Light 9	26-2		P2:4	297				
RCB/RCTTL10	Rear Car Button / Tell Tale Light 10	26-3		P3:4	298				
RCB/RCTTL11	Rear Car Button / Tell Tale Light 11	26-4		P4:4	299				
RCB/RCTTL12	Rear Car Button / Tell Tale Light 12	27-1		P1:4	300				
RCB/RCTTL13	Rear Car Button / Tell Tale Light 13	27-2		P2:4	301				
RCB/RCTTL14	Rear Car Button / Tell Tale Light 14	27-3		P3:4	302				
RCB/RCTTL15	Rear Car Button / Tell Tale Light 15	27-4		P4:4	303				

Date: 05-11-2009

Please fill in

CHANGES

WARNING

THIS WORK AND THE INFORMATION IT CONTAINS ARE THE PROPERTY OF OTIS ELEVATOR COMPANY ("OTIS"), IT IS BE LOANED TO OTHERS ON THE EXPRESS CONDITION THAT IT WILL BE USED ONLY FOR OR ON BEHALF OF OTIS, THAT NEITHER IT NOR THE INFORMATION IT CONTAINS WILL BE REPRODUCED OR DISCLOSED, IN WHOLE OR IN PART, WITHOUT THE PRIOR WRITTEN CONSENT OF OTIS, AND THAT ON DEMAND IT AND ANY COPIES WILL BE PROMPTLY RETURNED TO OTIS.

UNPUBLISHED WORK. © ELEVATOR COMPANY
ALL RIGHTS RESERVED.

Otis
A United Technologies Company

Wiring Diagram

ACD4-MR

MATERIAL:

SPEC:

FINISH:

DWG KAA21311AAF

OTIS ENGINEERING CENTER

SHANGHAI

DRAWN	JS YUN	ORIGINAL DATE
CHK	DH PARK/DH RYU	2014-04-08
APPD	JS LIM	
AUTH	CN366761	150 SHEETS
		SHEET 124

ALL DIMENSIONS METRIC

DRAFTED IN ACCORDANCE WITH OTIS DOCUMENT 52847

Standard I/O List

Software Version :

NOTE4C

Input

Location : HALL

Remarks : 1 RSL per 1 Floor

Symbol	Description	Addr.	RS-14 Pin	RS-18 Pin	I/O	Revision Orig	1 NO.	2 NO.	Page :
HB/HBTTL0	Hall Button / Tell Tale Light 0	28-1	P1:2		96				
GRPFBK1	Group RSL Feedback 1	28-2	P2:2		1056				
		28-3	P3:2		631				
		28-2	P4:2		016				
HB/HBTTL1	Hall Button / Tell Tale Light 1	29-1	P1:2		97				
UHB/UHTTL1	Up Hall Button / Tell Tale Light 1	29-2	P2:2		65				
		29-3	P3:2		--				
		29-4	P4:2		--				
HB/HBTTL2	Hall Button / Tell Tale Light 2	30-1	P1:2		98				
UHB/UHTTL2	Up Hall Button / Tell Tale Light 2	30-2	P2:2		66				
		30-3	P3:2		--				
		30-4	P4:2		--				
HB/HBTTL3	Hall Button / Tell Tale Light 3	31-1	P1:2		99				
UHB/UHTTL3	Up Hall Button / Tell Tale Light 3	31-2	P2:2		67				
		31-3	P3:2		--				
		31-4	P4:2		--				
HB/HBTTL4	Hall Button / Tell Tale Light 4	32-1	P1:2		100				
UHB/UHTTL4	Up Hall Button / Tell Tale Light 4	32-2	P2:2		68				
		32-3	P3:2		--				
		32-4	P4:2		--				
HB/HBTTL5	Hall Button / Tell Tale Light 5	33-1	P1:2		101				
UHB/UHTTL5	Up Hall Button / Tell Tale Light 5	33-2	P2:2		69				
		33-3	P3:2		--				
		33-4	P4:2		--				
HB/HBTTL6	Hall Button / Tell Tale Light 6	34-1	P1:2		102				
UHB/UHTTL6	Up Hall Button / Tell Tale Light 6	34-2	P2:2		70				
		34-3	P3:2		--				
		34-4	P4:2		--				
HB/HBTTL7	Hall Button / Tell Tale Light 7	35-1	P1:2		103				
UHB/UHTTL7	Up Hall Button / Tell Tale Light 7	35-2	P2:2		71				
		35-3	P3:2		--				
		35-4	P4:2		--				

Date: 05-11-2009

Please fill in

Standard I/O List

Software Version :

NOTE4C

Output

Location: HALL

Remarks: 1 RSL per 1 Floor

Symbol	Description	Addr.	RS-14 Pin	RS-18 Pin	I/O	Revision Orig	1 NO.	2 NO.	Page :
HB/HBTTL0	Hall Button / Tell Tale Light 0	28-1	P1:4		96				
GRPTST1	Group RSL Test 1	28-2	P2:4		1057				
DHL 0	Down Hall Lantern 0	28-3	P3:4		160				
UHL 0	Up Hall Lantern 0	28-4	P4:4		128				
HB/HBTTL1	Hall Button / Tell Tale Light 1	29-1	P1:4		97				
UHB/UHTTL1	Up Hall Button / Tell Tale Light 1	29-2	P2:4		65				
DHL 1	Down Hall Lantern 1	29-3	P3:4		161				
UHL 1	Up Hall Lantern 1	29-4	P4:4		129				
HB/HBTTL2	Hall Button / Tell Tale Light 2	30-1	P1:4		98				
UHB/UHTTL2	Up Hall Button / Tell Tale Light 2	30-2	P2:4		66				
DHL 2	Down Hall Lantern 2	30-3	P3:4		162				
UHL 2	Up Hall Lantern 2	30-4	P4:4		130				
HB/HBTTL3	Hall Button / Tell Tale Light 3	31-1	P1:4		99				
UHB/UHTTL3	Up Hall Button / Tell Tale Light 3	31-2	P2:4		67				
DHL 3	Down Hall Lantern 3	31-3	P3:4		163				
UHL 3	Up Hall Lantern 3	31-4	P4:4		131				
HB/HBTTL4	Hall Button / Tell Tale Light 4	32-1	P1:4		100				
UHB/UHTTL4	Up Hall Button / Tell Tale Light 4	32-2	P2:4		68				
DHL 4	Down Hall Lantern 4	32-3	P3:4		164				
UHL 4	Up Hall Lantern 4	32-4	P4:4		132				
HB/HBTTL5	Hall Button / Tell Tale Light 5	33-1	P1:4		101				
UHB/UHTTL5	Up Hall Button / Tell Tale Light 5	33-2	P2:4		69				
DHL 5	Down Hall Lantern 5	33-3	P3:4		165				
UHL 5	Up Hall Lantern 5	33-4	P4:4		133				
HB/HBTTL6	Hall Button / Tell Tale Light 6	34-1	P1:4		102				
UHB/UHTTL6	Up Hall Button / Tell Tale Light 6	34-2	P2:4		70				
DHL 6	Down Hall Lantern 6	34-3	P3:4		166				
UHL 6	Up Hall Lantern 6	34-4	P4:4		134				
HB/HBTTL7	Hall Button / Tell Tale Light 7	35-1	P1:4		103				
UHB/UHTTL7	Up Hall Button / Tell Tale Light 7	35-2	P2:4		71				
DHL 7	Down Hall Lantern 7	35-3	P3:4		167				
UHL 7	Up Hall Lantern 7	35-4	P4:4		135				

Date: 05-11-2009

Please fill in

CHANGES

WARNING

THIS WORK AND THE INFORMATION IT CONTAINS ARE THE PROPERTY OF OTIS ELEVATOR COMPANY ("OTIS"), IT IS DELIVERED TO OTHERS ON THE EXPRESS CONDITION THAT IT WILL BE USED ONLY FOR OR ON BEHALF OF OTIS, THAT NEITHER IT NOR THE INFORMATION IT CONTAINS WILL BE REPRODUCED OR DISCLOSED, IN WHOLE OR IN PART, WITHOUT THE PRIOR WRITTEN CONSENT OF OTIS, AND THAT ON DEMAND IT AND ANY COPIES WILL BE PROMPTLY RETURNED TO OTIS.

UNPUBLISHED WORK. © ELEVATOR COMPANY
ALL RIGHTS RESERVED.

Otis
A United Technologies Company

Wiring Diagram

ACD4-MR

MATERIAL:

SPEC:

FINISH:

DWG KAA21311AAF

OTIS ENGINEERING CENTER

SHANGHAI

DRAWN	JS YUN	ORIGINAL DATE
CHK	DH PARK/DH RYU	2014-04-08
APPD	JS LIM	
AUTH	CN366761	150 SHEETS
		SHEET 125

ALL DIMENSIONS METRIC

DRAFTED IN ACCORDANCE WITH OTIS DOCUMENT 52847

Standard I/O List

Software Version :

NOTE5C

Input

Location : HALL

Remarks : 1 RSL per 1 Floor

Symbol	Description	Addr.	RS-14 Pin	RS-18 Pin	I/O	Revision Orig	1 NO.	2 NO.	Page :
HB/HBTTL8	Hall Button / Tell Tale Light 8	36-1	P1:2		104				
UHB/UHTTL8	Up Hall Button / Tell Tale Light 8	36-2	P2:2		72				
		36-3	P3:2		--				
		36-4	P4:2		--				
HB/HBTTL9	Hall Button / Tell Tale Light 9	37-1	P1:2		105				
UHB/UHTTL9	Up Hall Button / Tell Tale Light 9	37-2	P2:2		73				
		37-3	P3:2		--				
		37-4	P4:2		--				
HB/HBTTL10	Hall Button / Tell Tale Light 10	38-1	P1:2		106				
UHB/UHTTL10	Up Hall Button / Tell Tale Light 10	38-2	P2:2		74				
		38-3	P3:2		--				
		38-4	P4:2		--				
HB/HBTTL11	Hall Button / Tell Tale Light 11	39-1	P1:2		107				
UHB/UHTTL11	Up Hall Button / Tell Tale Light 11	39-2	P2:2		75				
		39-3	P3:2		--				
		39-4	P4:2		--				
HB/HBTTL12	Hall Button / Tell Tale Light 12	40-1	P1:2		108				
UHB/UHTTL12	Up Hall Button / Tell Tale Light 12	40-2	P2:2		76				
		40-3	P3:2		--				
		40-4	P4:2		--				
HB/HBTTL13	Hall Button / Tell Tale Light 13	41-1	P1:2		109				
UHB/UHTTL13	Up Hall Button / Tell Tale Light 13	41-2	P2:2		77				
		41-3	P3:2		--				
		41-4	P4:2		--				
HB/HBTTL14	Hall Button / Tell Tale Light 14	42-1	P1:2		110				
UHB/UHTTL14	Up Hall Button / Tell Tale Light 14	42-2	P2:2		78				
		42-3	P3:2		--				
		42-4	P4:2		--				
HB/HBTTL15	Hall Button / Tell Tale Light 15	43-1	P1:2		111				
UHB/UHTTL15	Up Hall Button / Tell Tale Light 15	43-2	P2:2		79				
		43-3	P3:2		--				
		43-4	P4:2		--				

Date: 05-11-2009

Please fill in

Standard I/O List

Software Version :

NOTE5C

Output

Location: HALL

Remarks: 1 RSL per 1 Floor

Symbol	Description	Addr.	RS-14 Pin	RS-18 Pin	I/O	Revision Orig	1 NO.	2 NO.	Page :
HB/HBTTL8	Hall Button / Tell Tale Light 8	36-1	P1:4		104				
UHB/UHTTL8	Up Hall Button / Tell Tale Light 8	36-2	P2:4		72				
DHL 8	Down Hall Lantern 8	36-3	P3:4		168				
UHL 8	Up Hall Lantern 8	36-4	P4:4		136				
HB/HBTTL9	Hall Button / Tell Tale Light 9	37-1	P1:4		105				
UHB/UHTTL9	Up Hall Button / Tell Tale Light 9	37-2	P2:4		73				
DHL 9	Down Hall Lantern 9	37-3	P3:4		169				
UHL 9	Up Hall Lantern 9	37-4	P4:4		137				
HB/HBTTL10	Hall Button / Tell Tale Light 10	38-1	P1:4		106				
UHB/UHTTL10	Up Hall Button / Tell Tale Light 10	38-2	P2:4		74				
DHL 10	Down Hall Lantern 10	38-3	P3:4		170				
UHL 10	Up Hall Lantern 10	38-4	P4:4		138				
HB/HBTTL11	Hall Button / Tell Tale Light 11	39-1	P1:4		107				
UHB/UHTTL11	Up Hall Button / Tell Tale Light 11	39-2	P2:4		75				
DHL 11	Down Hall Lantern 11	39-3	P3:4		171				
UHL 11	Up Hall Lantern 11	39-4	P4:4		139				
HB/HBTTL12	Hall Button / Tell Tale Light 12	40-1	P1:4		108				
UHB/UHTTL12	Up Hall Button / Tell Tale Light 12	40-2	P2:4		76				
DHL 12	Down Hall Lantern 12	40-3	P3:4		172				
UHL 12	Up Hall Lantern 12	40-4	P4:4		140				
HB/HBTTL13	Hall Button / Tell Tale Light 13	41-1	P1:4		109				
UHB/UHTTL13	Up Hall Button / Tell Tale Light 13	41-2	P2:4		77				
DHL 13	Down Hall Lantern 13	41-3	P3:4		173				
UHL 13	Up Hall Lantern 13	41-4	P4:4		141				
HB/HBTTL14	Hall Button / Tell Tale Light 14	42-1	P1:4		110				
UHB/UHTTL14	Up Hall Button / Tell Tale Light 14	42-2	P2:4		78				
DHL 14	Down Hall Lantern 14	42-3	P3:4		174				
UHL 14	Up Hall Lantern 14	42-4	P4:4		142				
HB/HBTTL15	Hall Button / Tell Tale Light 15	43-1	P1:4		111				
UHB/UHTTL15	Up Hall Button / Tell Tale Light 15	43-2	P2:4		79				
DHL 15	Down Hall Lantern 15	43-3	P3:4		175				
UHL 15	Up Hall Lantern 15	43-4	P4:4		143				

Date: 05-11-2009

Please fill in

CHANGES

WARNING

THIS WORK AND THE INFORMATION IT CONTAINS ARE THE PROPERTY OF OTIS ELEVATOR COMPANY ("OTIS"), IF IS BE LENDER TO OTHERS ON THE EXPRESS CONDITION THAT IT WILL BE USED ONLY FOR OR ON BEHALF OF OTIS, THAT NEITHER IT NOR THE INFORMATION IT CONTAINS WILL BE REPRODUCED OR DISCLOSED, IN WHOLE OR IN PART, WITHOUT THE PRIOR WRITTEN CONSENT OF OTIS, AND THAT ON DEMAND IT AND ANY COPIES WILL BE PROMPTLY RETURNED TO OTIS.

UNPUBLISHED WORK. © ELEVATOR COMPANY
ALL RIGHTS RESERVED.

Otis
A United Technologies Company

Wiring Diagram

ACD4-MR

MATERIAL:

SPEC:

FINISH:

DWG KAA21311AAF

OTIS ENGINEERING CENTER
SHANGHAI

DRAWN	JS YUN	ORIGINAL DATE	2014-04-08
CHK	DH PARK/DH RYU		
APPD	JS LIM		
AUTH	CN366761	150 SHEETS	
		SHEET 126	

ALL DIMENSIONS METRIC

DRAFTED IN ACCORDANCE WITH OTIS DOCUMENT 52847

Standard I/O List

Software Version :

NOTE6C

Input

Location : HALL

Remarks : 1 RSL per 1 Floor

Symbol	Description	Addr.	RS-14 Pin	RS-18 Pin	I/O	Revision Orig	1 NO.	2 NO.	Page :
HB/HBTTL16	Hall Button / Tell Tale Light 16	44-1	P1:2		112				
UHB/UHTTL16	Up Hall Button / Tell Tale Light 16	44-2	P2:2		80				
		44-3	P3:2		--				
		44-4	P4:2		--				
HB/HBTTL17	Hall Button / Tell Tale Light 17	45-1	P1:2		113				
UHB/UHTTL17	Up Hall Button / Tell Tale Light 17	45-2	P2:2		81				
		45-3	P3:2		--				
		45-4	P4:2		--				
HB/HBTTL18	Hall Button / Tell Tale Light 18	46-1	P1:2		114				
UHB/UHTTL18	Up Hall Button / Tell Tale Light 18	46-2	P2:2		82				
		46-3	P3:2		--				
		46-4	P4:2		--				
HB/HBTTL19	Hall Button / Tell Tale Light 19	47-1	P1:2		115				
UHB/UHTTL19	Up Hall Button / Tell Tale Light 19	47-2	P2:2		83				
		47-3	P3:2		--				
		47-4	P4:2		--				
HB/HBTTL20	Hall Button / Tell Tale Light 20	48-1	P1:2		116				
UHB/UHTTL20	Up Hall Button / Tell Tale Light 20	48-2	P2:2		84				
		48-3	P3:2		--				
		48-4	P4:2		--				
HB/HBTTL21	Hall Button / Tell Tale Light 21	49-1	P1:2		117				
UHB/UHTTL21	Up Hall Button / Tell Tale Light 21	49-2	P2:2		85				
		49-3	P3:2		--				
		49-4	P4:2		--				
HB/HBTTL22	Hall Button / Tell Tale Light 22	50-1	P1:2		118				
UHB/UHTTL22	Up Hall Button / Tell Tale Light 22	50-2	P2:2		86				
		50-3	P3:2		--				
		50-4	P4:2		--				
HB/HBTTL23	Hall Button / Tell Tale Light 23	51-1	P1:2		119				
UHB/UHTTL23	Up Hall Button / Tell Tale Light 23	51-2	P2:2		87				
		51-3	P3:2		--				
		51-4	P4:2		--				

Date: 05-11-2009

Please fill in

Standard I/O List

Software Version :

NOTE6C

Output

Location: HALL

Remarks: 1 RSL per 1 Floor

Symbol	Description	Addr.	RS-14 Pin	RS-18 Pin	I/O	Revision Orig	1 NO.	2 NO.	Page :
HBTTL 16	HB Tell Tale L. 16	44-1	P1:4		112				
UHTTL 16	UHB Tell Tale L. 16	44-2	P2:4		80				
DHL 16	Down Hall Lantern 16	44-3	P3:4		176				
UHL 16	Up Hall Lantern 16	44-4	P4:4		144				
HBTTL 17	HB Tell Tale L. 17	45-1	P1:4		113				
UHTTL 17	UHB Tell Tale L. 17	45-2	P2:4		81				
DHL 17	Down Hall Lantern 17	45-3	P3:4		177				
UHL 17	Up Hall Lantern 17	45-4	P4:4		145				
HBTTL 18	HB Tell Tale L. 18	46-1	P1:4		114				
UHTTL 18	UHB Tell Tale L. 18	46-2	P2:4		82				
DHL 18	Down Hall Lantern 18	46-3	P3:4		178				
UHL 18	Up Hall Lantern 18	46-4	P4:4		146				
HBTTL 19	HB Tell Tale L. 19	47-1	P1:4		115				
UHTTL 19	UHB Tell Tale L. 19	47-2	P2:4		83				
DHL 19	Down Hall Lantern 19	47-3	P3:4		179				
UHL 19	Up Hall Lantern 19	47-4	P4:4		147				
HBTTL 20	HB Tell Tale L. 20	48-1	P1:4		116				
UHTTL 20	UHB Tell Tale L. 20	48-2	P2:4		84				
DHL 20	Down Hall Lantern 20	48-3	P3:4		180				
UHL 20	Up Hall Lantern 20	48-4	P4:4		148				
HBTTL 21	HB Tell Tale L. 21	49-1	P1:4		117				
UHTTL 21	UHB Tell Tale L. 21	49-2	P2:4		85				
DHL 21	Down Hall Lantern 21	49-3	P3:4		181				
UHL 21	Up Hall Lantern 21	49-4	P4:4		149				
HBTTL 22	HB Tell Tale L. 22	50-1	P1:4		118				
UHTTL 22	UHB Tell Tale L. 22	50-2	P2:4		86				
DHL 22	Down Hall Lantern 22	50-3	P3:4		182				
UHL 22	Up Hall Lantern 22	50-4	P4:4		150				
HBTTL 23	HB Tell Tale L. 23	51-1	P1:4		119				
UHTTL 23	UHB Tell Tale L. 23	51-2	P2:4		87				
DHL 23	Down Hall Lantern 23	51-3	P3:4		183				
UHL 23	Up Hall Lantern 23	51-4	P4:4		151				

Date: 05-11-2009

Please fill in

CHANGES

WARNING

THIS WORK AND THE INFORMATION IT CONTAINS ARE THE PROPERTY OF OTIS ELEVATOR COMPANY (OTIS) IT IS DELIVERED TO OTHERS ON THE EXPRESS CONDITION THAT IT WILL BE USED ONLY FOR OR ON BEHALF OF OTIS THAT NEITHER IT NOR THE INFORMATION IT CONTAINS WILL BE REPRODUCED OR DISCLOSED, IN WHOLE OR IN PART, WITHOUT THE PRIOR WRITTEN CONSENT OF OTIS, AND THAT ON DEMAND IT AND ANY COPIES WILL BE PROMPTLY RETURNED TO OTIS.

UNPUBLISHED WORK. ©2009 ELEVATOR COMPANY
ALL RIGHTS RESERVED.

Otis
A United Technologies Company

Wiring Diagram

ACD4-MR

MATERIAL:

SPEC:

FINISH:

DWG KAA21311AAF

OTIS ENGINEERING CENTER

SHANGHAI

DRAWN	JS YUN	ORIGINAL DATE
CHK	DH PARK/DH RYU	2014-04-08
APPD	JS LIM	
AUTH	CN366761	150 SHEETS
		SHEET 127

ALL DIMENSIONS METRIC

DRAFTED IN ACCORDANCE WITH OTIS DOCUMENT 52847

Standard I/O List NOTE7C

Software Version :

Input

Location : HALL

Remarks : 1 RSL per 2 Floor

Symbol	Description	Addr.	RS-14 Pin	RS-18 Pin	I/O	Revision Orig	1 NO.	2 NO.	Page :
HB/HBTTL24	Hall Button / Tell Tale Light 24	52-1	P1:2		120				
UHB/UHTTL24	Up Hall Button / Tell Tale Light 24	52-2	P2:2		88				
		52-3	P3:2		--				
		52-4	P4:2		--				
HB/HBTTL25	Hall Button / Tell Tale Light 25	53-1	P1:2		121				
UHB/UHTTL25	Up Hall Button / Tell Tale Light 25	53-2	P2:2		89				
		53-3	P3:2		--				
		53-4	P4:2		--				
HB/HBTTL26	Hall Button / Tell Tale Light 26	54-1	P1:2		122				
UHB/UHTTL26	Up Hall Button / Tell Tale Light 26	54-2	P2:2		90				
		54-3	P3:2		--				
		54-4	P4:2		--				
HB/HBTTL27	Hall Button / Tell Tale Light 27	55-1	P1:2		123				
UHB/UHTTL27	Up Hall Button / Tell Tale Light 27	55-2	P2:2		91				
		55-3	P3:2		--				
		55-4	P4:2		--				
HB/HBTTL28	Hall Button / Tell Tale Light 28	56-1	P1:2		124				
UHB/UHTTL28	Up Hall Button / Tell Tale Light 28	56-2	P2:2		92				
		56-3	P3:2		--				
		56-4	P4:2		--				
HB/HBTTL29	Hall Button / Tell Tale Light 29	57-1	P1:2		125				
UHB/UHTTL29	Up Hall Button / Tell Tale Light 29	57-2	P2:2		93				
		57-3	P3:2		--				
		57-4	P4:2		--				
HB/HBTTL30	Hall Button / Tell Tale Light 30	58-1	P1:2		126				
UHB/UHTTL30	Up Hall Button / Tell Tale Light 30	58-2	P2:2		94				
		58-3	P3:2		--				
		58-4	P4:2		--				
HB/HBTTL31	Hall Button / Tell Tale Light 31	59-1	P1:2		127				
		59-2	P2:2		--				
		59-3	P3:2		--				
		59-4	P4:2		--				
		60-1	P1:2						
		60-2	P2:2						
PKS	Parking Switch	60-3	P3:2		11				
EFK	Emergency Fireman Keyswitch	60-4	P4:2		16				

Date: 05-11-2009

Please fill in

Standard I/O List NOTE7C

Software Version :

Output

Location: HALL

Remarks: 1 RSL per 2 Floor

Symbol	Description	Addr.	RS-14 Pin	RS-18 Pin	I/O	Revision Orig	1 NO.	2 NO.	Page :
HB/HBTTL24	Hall Button / Tell Tale Light 24	52-1	P1:4		120				
UHB/UHTTL24	Up Hall Button / Tell Tale Light 24	52-2	P2:4		88				
DHL 24	Down Hall Lantern 24	52-3	P3:4		184				
UHL 24	Up Hall Lantern 24	52-4	P4:4		152				
HB/HBTTL25	Hall Button / Tell Tale Light 25	53-1	P1:4		121				
UHB/UHTTL25	Up Hall Button / Tell Tale Light 25	53-2	P2:4		89				
DHL 25	Down Hall Lantern 25	53-3	P3:4		185				
UHL 25	Up Hall Lantern 25	53-4	P4:4		153				
HB/HBTTL26	Hall Button / Tell Tale Light 26	54-1	P1:4		122				
UHB/UHTTL26	Up Hall Button / Tell Tale Light 26	54-2	P2:4		90				
DHL 26	Down Hall Lantern 26	54-3	P3:4		186				
UHL 26	Up Hall Lantern 26	54-4	P4:4		154				
HB/HBTTL27	Hall Button / Tell Tale Light 27	55-1	P1:4		123				
UHB/UHTTL27	Up Hall Button / Tell Tale Light 27	55-2	P2:4		91				
DHL 27	Down Hall Lantern 27	55-3	P3:4		187				
UHL 27	Up Hall Lantern 27	55-4	P4:4		155				
HB/HBTTL28	Hall Button / Tell Tale Light 28	56-1	P1:4		124				
UHB/UHTTL28	Up Hall Button / Tell Tale Light 28	56-2	P2:4		92				
DHL 28	Down Hall Lantern 28	56-3	P3:4		188				
UHL 28	Up Hall Lantern 28	56-4	P4:4		156				
HB/HBTTL29	Hall Button / Tell Tale Light 29	57-1	P1:4		125				
UHB/UHTTL29	Up Hall Button / Tell Tale Light 29	57-2	P2:4		93				
DHL 29	Down Hall Lantern 29	57-3	P3:4		189				
UHL 29	Up Hall Lantern 29	57-4	P4:4		157				
HB/HBTTL30	Hall Button / Tell Tale Light 30	58-1	P1:4		126				
UHB/UHTTL30	Up Hall Button / Tell Tale Light 30	58-2	P2:4		94				
DHL 30	Down Hall Lantern 30	58-3	P3:4		190				
UHL 30	Up Hall Lantern 30	58-4	P4:4		158				
HB/HBTTL31	Hall Button / Tell Tale Light 31	59-1	P1:4		127				
		59-2	P2:4		--				
DHL 31	Down Hall Lantern 31	59-3	P3:4		191				
UHL 31	Up Hall Lantern 31	59-4	P4:4		159				
		60-1	P1:2						
		60-2	P2:2						
		60-3	P3:2						
EFL	Emergency Fireman Light	60-4	P4:2		716				

Date: 05-11-2009

Please fill in

CHANGES

WARNING
THIS WORK AND THE INFORMATION IT CONTAINS ARE THE PROPERTY OF OTIS ELEVATOR COMPANY ("OTIS"), IT IS BE LENDER TO OTHERS ON THE EXPRESS CONDITION THAT IT WILL BE USED ONLY FOR OR ON BEHALF OF OTIS, THAT NEITHER IT NOR THE INFORMATION IT CONTAINS WILL BE REPRODUCED OR DISCLOSED, IN WHOLE OR IN PART, WITHOUT THE PRIOR WRITTEN CONSENT OF OTIS, AND THAT ON DEMAND IT AND ANY COPIES WILL BE PROMPTLY RETURNED TO OTIS.

UNPUBLISHED WORK. © ELEVATOR COMPANY
ALL RIGHTS RESERVED.

Otis
A United Technologies Company

Wiring Diagram
ACD4-MR

MATERIAL:

SPEC:

FINISH:

DWG KAA21311AAF

OTIS ENGINEERING CENTER
SHANGHAI

DRAWN	JS YUN	ORIGINAL DATE 2014-04-08
CHK	DH PARK/DH RYU	
APPD	JS LIM	
AUTH	CN366761	150 SHEETS
		SHEET 128

ALL DIMENSIONS METRIC

DRAFTED IN ACCORDANCE WITH OTIS DOCUMENT 52847

Standard I/O List NOTE8C

Software Version :

Input

Location : HALL

Remarks : 1 RSL per 2 Floor

Symbol	Description	Addr.	RS-14 Pin	RS-18 Pin	I/O	Revision Orig	1 NO.	2 NO.	Page :
HB/HBTTL0	Hall Button / Tell Tale Light 0	28-1	P1:2		96				
GRPFBK1	Group RSL Feedback 1	28-2	P2:2		1056				
HB/HBTTL1	Hall Button / Tell Tale Light 1	28-3	P3:2		97				
UHB/UHTTL1	Up Hall Button / Tell Tale Light 1	28-4	P4:2		65				
HB/HBTTL2	Hall Button / Tell Tale Light 2	29-1	P1:2		98				
UHB/UHTTL2	Up Hall Button / Tell Tale Light 2	29-2	P2:2		66				
HB/HBTTL3	Hall Button / Tell Tale Light 3	29-3	P3:2		99				
UHB/UHTTL3	Up Hall Button / Tell Tale Light 3	29-4	P4:2		67				
HB/HBTTL4	Hall Button / Tell Tale Light 4	30-1	P1:2		100				
UHB/UHTTL4	Up Hall Button / Tell Tale Light 4	30-2	P2:2		68				
HB/HBTTL5	Hall Button / Tell Tale Light 5	30-3	P3:2		101				
UHB/UHTTL5	Up Hall Button / Tell Tale Light 5	30-4	P4:2		69				
HB/HBTTL6	Hall Button / Tell Tale Light 6	31-1	P1:2		102				
UHB/UHTTL6	Up Hall Button / Tell Tale Light 6	31-2	P2:2		70				
HB/HBTTL7	Hall Button / Tell Tale Light 7	31-3	P3:2		103				
UHB/UHTTL7	Up Hall Button / Tell Tale Light 7	31-4	P4:2		71				
HB/HBTTL8	Hall Button / Tell Tale Light 8	32-1	P1:2		104				
UHB/UHTTL8	Up Hall Button / Tell Tale Light 8	32-2	P2:2		72				
HB/HBTTL9	Hall Button / Tell Tale Light 9	32-3	P3:2		105				
UHB/UHTTL9	Up Hall Button / Tell Tale Light 9	32-4	P4:2		73				
HB/HBTTL10	Hall Button / Tell Tale Light 10	33-1	P1:2		106				
UHB/UHTTL10	Up Hall Button / Tell Tale Light 10	33-2	P2:2		74				
HB/HBTTL11	Hall Button / Tell Tale Light 11	33-3	P3:2		107				
UHB/UHTTL11	Up Hall Button / Tell Tale Light 11	33-4	P4:2		75				
HB/HBTTL12	Hall Button / Tell Tale Light 12	34-1	P1:2		108				
UHB/UHTTL12	Up Hall Button / Tell Tale Light 12	34-2	P2:2		76				
HB/HBTTL13	Hall Button / Tell Tale Light 13	34-3	P3:2		109				
UHB/UHTTL13	Up Hall Button / Tell Tale Light 13	34-4	P4:2		77				
HB/HBTTL14	Hall Button / Tell Tale Light 14	35-1	P1:2		110				
UHB/UHTTL14	Up Hall Button / Tell Tale Light 14	35-2	P2:2		78				
HB/HBTTL15	Hall Button / Tell Tale Light 15	35-3	P3:2		111				
UHB/UHTTL15	Up Hall Button / Tell Tale Light 15	35-4	P4:2		79				

Date: 05-11-2009

Please fill in

Standard I/O List NOTE8C

Software Version :

Output

Location: HALL

Remarks: 1 RSL per 2 Floor

Symbol	Description	Addr.	RS-14 Pin	RS-18 Pin	I/O	Revision Orig	1 NO.	2 NO.	Page :
HB/HBTTL0	Hall Button / Tell Tale Light 0	28-1	P1:4		96				
GRPTST1	Group RSL Test 1	28-2	P2:4		1057				
HB/HBTTL1	Hall Button / Tell Tale Light 1	28-3	P3:4		97				
UHB/UHTTL1	Up Hall Button / Tell Tale Light 1	28-4	P4:4		65				
HB/HBTTL2	Hall Button / Tell Tale Light 2	29-1	P1:4		98				
UHB/UHTTL2	Up Hall Button / Tell Tale Light 2	29-2	P2:4		66				
HB/HBTTL3	Hall Button / Tell Tale Light 3	29-3	P3:4		99				
UHB/UHTTL3	Up Hall Button / Tell Tale Light 3	29-4	P4:4		67				
HB/HBTTL4	Hall Button / Tell Tale Light 4	30-1	P1:4		100				
UHB/UHTTL4	Up Hall Button / Tell Tale Light 4	30-2	P2:4		68				
HB/HBTTL5	Hall Button / Tell Tale Light 5	30-3	P3:4		101				
UHB/UHTTL5	Up Hall Button / Tell Tale Light 5	30-4	P4:4		69				
HB/HBTTL6	Hall Button / Tell Tale Light 6	31-1	P1:4		102				
UHB/UHTTL6	Up Hall Button / Tell Tale Light 6	31-2	P2:4		70				
HB/HBTTL7	Hall Button / Tell Tale Light 7	31-3	P3:4		103				
UHB/UHTTL7	Up Hall Button / Tell Tale Light 7	31-4	P4:4		71				
HB/HBTTL8	Hall Button / Tell Tale Light 8	32-1	P1:4		104				
UHB/UHTTL8	Up Hall Button / Tell Tale Light 8	32-2	P2:4		72				
HB/HBTTL9	Hall Button / Tell Tale Light 9	32-3	P3:4		105				
UHB/UHTTL9	Up Hall Button / Tell Tale Light 9	32-4	P4:4		73				
HB/HBTTL10	Hall Button / Tell Tale Light 10	33-1	P1:4		106				
UHB/UHTTL10	Up Hall Button / Tell Tale Light 10	33-2	P2:4		74				
HB/HBTTL11	Hall Button / Tell Tale Light 11	33-3	P3:4		107				
UHB/UHTTL11	Up Hall Button / Tell Tale Light 11	33-4	P4:4		75				
HB/HBTTL12	Hall Button / Tell Tale Light 12	34-1	P1:4		108				
UHB/UHTTL12	Up Hall Button / Tell Tale Light 12	34-2	P2:4		76				
HB/HBTTL13	Hall Button / Tell Tale Light 13	34-3	P3:4		109				
UHB/UHTTL13	Up Hall Button / Tell Tale Light 13	34-4	P4:4		77				
HB/HBTTL14	Hall Button / Tell Tale Light 14	35-1	P1:4		110				
UHB/UHTTL14	Up Hall Button / Tell Tale Light 14	35-2	P2:4		78				
HB/HBTTL15	Hall Button / Tell Tale Light 15	35-3	P3:4		111				
UHB/UHTTL15	Up Hall Button / Tell Tale Light 15	35-4	P4:4		79				

Date: 05-11-2009

Please fill in

CHANGES

WARNING

THIS WORK AND THE INFORMATION IT CONTAINS ARE THE PROPERTY OF OTIS ELEVATOR COMPANY (OTIS). IT IS DELIVERED TO OTHERS ON THE EXPRESS CONDITION THAT IT WILL BE USED ONLY FOR OR ON BEHALF OF OTIS, THAT NEITHER IT NOR THE INFORMATION IT CONTAINS WILL BE REPRODUCED OR DISCLOSED, IN WHOLE OR IN PART, WITHOUT THE PRIOR WRITTEN CONSENT OF OTIS, AND THAT ON DEMAND IT AND ANY COPIES WILL BE PROMPTLY RETURNED TO OTIS.

UNPUBLISHED WORK. © ELEVATOR COMPANY
ALL RIGHTS RESERVED.

Otis
A United Technologies Company

Wiring Diagram
ACD4-MR

MATERIAL:

SPEC:

FINISH:

DWG KAA21311AAF

OTIS ENGINEERING CENTER
SHANGHAI

DRAWN	JS YUN	ORIGINAL DATE	2014-04-08
CHK	DH PARK/DH RYU		
APPD	JS LIM		
AUTH	CN366761	150 SHEETS	
		SHEET 129	

ALL DIMENSIONS METRIC

DRAFTED IN ACCORDANCE WITH OTIS DOCUMENT 52847

Standard I/O List NOTE9C

Software Version :

Input

Location : HALL

Remarks : 1 RSL per 2 Floor

Symbol	Description	Addr.	RS-14 Pin	RS-18 Pin	I/O	Revision Orig	1 NO.	2 NO.	Page :
HB/HBTTL16	Hall Button / Tell Tale Light 16	36-1	P1:2		112				
UHB/UHTTL16	Up Hall Button / Tell Tale Light 16	36-2	P2:2		80				
HB/HBTTL17	Hall Button / Tell Tale Light 17	36-3	P3:3		113				
UHB/UHTTL17	Up Hall Button / Tell Tale Light 17	36-4	P4:4		81				
HB/HBTTL18	Hall Button / Tell Tale Light 18	37-1	P1:2		114				
UHB/UHTTL18	Up Hall Button / Tell Tale Light 18	37-2	P2:2		82				
HB/HBTTL19	Hall Button / Tell Tale Light 19	37-3	P3:2		115				
UHB/UHTTL19	Up Hall Button / Tell Tale Light 19	37-4	P4:2		83				
HB/HBTTL20	Hall Button / Tell Tale Light 20	38-1	P1:2		116				
UHB/UHTTL20	Up Hall Button / Tell Tale Light 20	38-2	P2:2		84				
HB/HBTTL21	Hall Button / Tell Tale Light 21	38-3	P3:2		117				
UHB/UHTTL21	Up Hall Button / Tell Tale Light 21	38-4	P4:2		85				
HB/HBTTL22	Hall Button / Tell Tale Light 22	39-1	P1:2		118				
UHB/UHTTL22	Up Hall Button / Tell Tale Light 22	39-2	P2:2		86				
HB/HBTTL23	Hall Button / Tell Tale Light 23	39-3	P3:2		119				
UHB/UHTTL23	Up Hall Button / Tell Tale Light 23	39-4	P4:2		87				
HB/HBTTL24	Hall Button / Tell Tale Light 24	40-1	P1:2		120				
UHB/UHTTL24	Up Hall Button / Tell Tale Light 24	40-2	P2:2		88				
HB/HBTTL25	Hall Button / Tell Tale Light 25	40-3	P3:2		121				
UHB/UHTTL25	Up Hall Button / Tell Tale Light 25	40-4	P4:2		89				
HB/HBTTL26	Hall Button / Tell Tale Light 26	41-1	P1:2		122				
UHB/UHTTL26	Up Hall Button / Tell Tale Light 26	41-2	P2:2		90				
HB/HBTTL27	Hall Button / Tell Tale Light 27	41-3	P3:2		123				
UHB/UHTTL27	Up Hall Button / Tell Tale Light 27	41-4	P4:2		91				
HB/HBTTL28	Hall Button / Tell Tale Light 28	42-1	P1:2		124				
UHB/UHTTL28	Up Hall Button / Tell Tale Light 28	42-2	P2:2		92				
HB/HBTTL29	Hall Button / Tell Tale Light 29	42-3	P3:2		125				
UHB/UHTTL29	Up Hall Button / Tell Tale Light 29	42-4	P4:2		93				
HB/HBTTL30	Hall Button / Tell Tale Light 30	43-1	P1:2		126				
UHB/UHTTL30	Up Hall Button / Tell Tale Light 30	43-2	P2:2		94				
HB/HBTTL31	Hall Button / Tell Tale Light 31	43-3	P3:2		127				
		43-4	P4:2		--				
		60-1	P1:2		--				
		60-2	P2:2		--				
PKS	Parking Switch	60-3	P3:2		11				
EFK	Emergency Fireman Keyswitch	60-4	P4:2		16				

Date: 05-11-2009

Please fill in

Standard I/O List NOTE9C

Software Version :

Output

Location: HALL

Remarks: 1 RSL per 2 Floor

Symbol	Description	Addr.	RS-14 Pin	RS-18 Pin	I/O	Revision Orig	1 NO.	2 NO.	Page :
HB/HBTTL16	Hall Button / Tell Tale Light 16	36-1	P1:4		112				
UHB/UHTTL16	Up Hall Button / Tell Tale Light 16	36-2	P2:4		80				
HB/HBTTL17	Hall Button / Tell Tale Light 17	36-3	P3:4		113				
UHB/UHTTL17	Up Hall Button / Tell Tale Light 17	36-4	P4:4		81				
HB/HBTTL18	Hall Button / Tell Tale Light 18	37-1	P1:4		114				
UHB/UHTTL18	Up Hall Button / Tell Tale Light 18	37-2	P2:4		82				
HB/HBTTL19	Hall Button / Tell Tale Light 19	37-3	P3:4		115				
UHB/UHTTL19	Up Hall Button / Tell Tale Light 19	37-4	P4:4		83				
HB/HBTTL20	Hall Button / Tell Tale Light 20	38-1	P1:4		116				
UHB/UHTTL20	Up Hall Button / Tell Tale Light 20	38-2	P2:4		84				
HB/HBTTL21	Hall Button / Tell Tale Light 21	38-3	P3:4		117				
UHB/UHTTL21	Up Hall Button / Tell Tale Light 21	38-4	P4:4		85				
HB/HBTTL22	Hall Button / Tell Tale Light 22	39-1	P1:4		118				
UHB/UHTTL22	Up Hall Button / Tell Tale Light 22	39-2	P2:4		86				
HB/HBTTL23	Hall Button / Tell Tale Light 23	39-3	P3:4		119				
UHB/UHTTL23	Up Hall Button / Tell Tale Light 23	39-4	P4:4		87				
HB/HBTTL24	Hall Button / Tell Tale Light 24	40-1	P1:4		120				
UHB/UHTTL24	Up Hall Button / Tell Tale Light 24	40-2	P2:4		88				
HB/HBTTL25	Hall Button / Tell Tale Light 25	40-3	P3:4		121				
UHB/UHTTL25	Up Hall Button / Tell Tale Light 25	40-4	P4:4		89				
HB/HBTTL26	Hall Button / Tell Tale Light 26	41-1	P1:4		122				
UHB/UHTTL26	Up Hall Button / Tell Tale Light 26	41-2	P2:4		90				
HB/HBTTL27	Hall Button / Tell Tale Light 27	41-3	P3:4		123				
UHB/UHTTL27	Up Hall Button / Tell Tale Light 27	41-4	P4:4		91				
HB/HBTTL28	Hall Button / Tell Tale Light 28	42-1	P1:4		124				
UHB/UHTTL28	Up Hall Button / Tell Tale Light 28	42-2	P2:4		92				
HB/HBTTL29	Hall Button / Tell Tale Light 29	42-3	P3:4		125				
UHB/UHTTL29	Up Hall Button / Tell Tale Light 29	42-4	P4:4		93				
HB/HBTTL30	Hall Button / Tell Tale Light 30	43-1	P1:4		126				
UHB/UHTTL30	Up Hall Button / Tell Tale Light 30	43-2	P2:4		94				
HB/HBTTL31	Hall Button / Tell Tale Light 31	43-3	P3:4		127				
		43-4	P4:4		--				
		60-1	P1:2		--				
		60-2	P2:2		--				
		60-3	P3:2		--				
EFL	Emergency Fireman Light	60-4	P4:2		716				

Date: 05-11-2009

Please fill in

CHANGES

WARNING
THIS WORK AND THE INFORMATION IT CONTAINS ARE THE PROPERTY OF OTIS ELEVATOR COMPANY ("OTIS"), IT IS BE LENDED TO OTHERS ON THE EXPRESS CONDITION THAT IT WILL BE USED ONLY FOR OR ON BEHALF OF OTIS, THAT NEITHER IT NOR THE INFORMATION IT CONTAINS WILL BE REPRODUCED OR DISCLOSED, IN WHOLE OR IN PART, WITHOUT THE PRIOR WRITTEN CONSENT OF OTIS, AND THAT ON DEMAND IT AND ANY COPIES WILL BE PROMPTLY RETURNED TO OTIS.

UNPUBLISHED WORK. © ELEVATOR COMPANY
ALL RIGHTS RESERVED.

Otis
A United Technologies Company

Wiring Diagram
ACD4-MR

MATERIAL:

SPEC:

FINISH:

DWG KAA21311AAF

OTIS ENGINEERING CENTER
SHANGHAI

DRAWN	JS YUN	ORIGINAL DATE
CHK	DH PARK/DH RYU	2014-04-08
APPD	JS LIM	
AUTH	CN366761	150 SHEETS
		SHEET 130

ALL DIMENSIONS METRIC

DRAFTED IN ACCORDANCE WITH OTIS DOCUMENT 52847

Standard I/O List NOTE9C

Software Version :

Input

Location : HALL

Remarks : 1 RSL per 2 Floor

Symbol	Description	Addr.	RS-14 Pin	RS-18 Pin	I/O	Revision Orig	1 NO.	2 NO.	Page :
		61-1	P1:2						
		61-2	P2:2						
		61-3	P3:3						
		61-4	P4:4						
HAD_RB	HAD/EEC Reset	62-1	P1:2		1267				
		62-2	P2:2						
		62-3	P3:2						
		62-4	P4:2						
		63-1	P1:2						
EFO	Emergency Fireman Operation	63-2	P2:2		624				
		63-3	P3:2						
		63-4	P4:2						

Date: 05-11-2009

Please fill in

Standard I/O List NOTE9C

Software Version :

Output

Location: HALL

Remarks: 1 RSL per 2 Floor

Symbol	Description	Addr.	RS-14 Pin	RS-18 Pin	I/O	Revision Orig	1 NO.	2 NO.	Page :
		61-1	P1:4						
		61-2	P2:4						
		61-3	P3:4						
		61-4	P4:4						
		62-1	P1:4						
HAD_STAT	HAD LED Out	62-2	P2:4		1268				
EECL	EEC LED Out	62-3	P3:4		1272				
BUZ_EF	EFS Buzzer	62-4	P4:4		1269				
		63-1	P1:4						
		63-2	P2:4						
		63-3	P3:4						
		63-4	P4:4						

Date: 05-11-2009

Please fill in

CHANGES

WARNING

THIS WORK AND THE INFORMATION IT CONTAINS ARE THE PROPERTY OF OTIS ELEVATOR COMPANY ("OTIS"), IT IS BEING GIVEN TO OTHERS ON THE EXPRESS CONDITION THAT IT WILL BE USED ONLY FOR OR ON BEHALF OF OTIS, THAT NEITHER IT NOR THE INFORMATION IT CONTAINS WILL BE REPRODUCED OR DISCLOSED, IN WHOLE OR IN PART, WITHOUT THE PRIOR WRITTEN CONSENT OF OTIS, AND THAT ON DEMAND IT AND ANY COPIES WILL BE PROMPTLY RETURNED TO OTIS.

UNPUBLISHED WORK. © ELEVATOR COMPANY
ALL RIGHTS RESERVED.

Otis
A United Technologies Company

Wiring Diagram
ACD4-MR

MATERIAL:

SPEC:

FINISH:

DWG KAA21311AAF

OTIS ENGINEERING CENTER
SHANGHAI

DRAWN	JS YUN	ORIGINAL DATE 2014-04-08
CHK	DH PARK/DH RYU	
APPD	JS LIM	
AUTH	CN366761	150 SHEETS
		SHEET 131

ALL DIMENSIONS METRIC

DRAFTED IN ACCORDANCE WITH OTIS DOCUMENT 52847

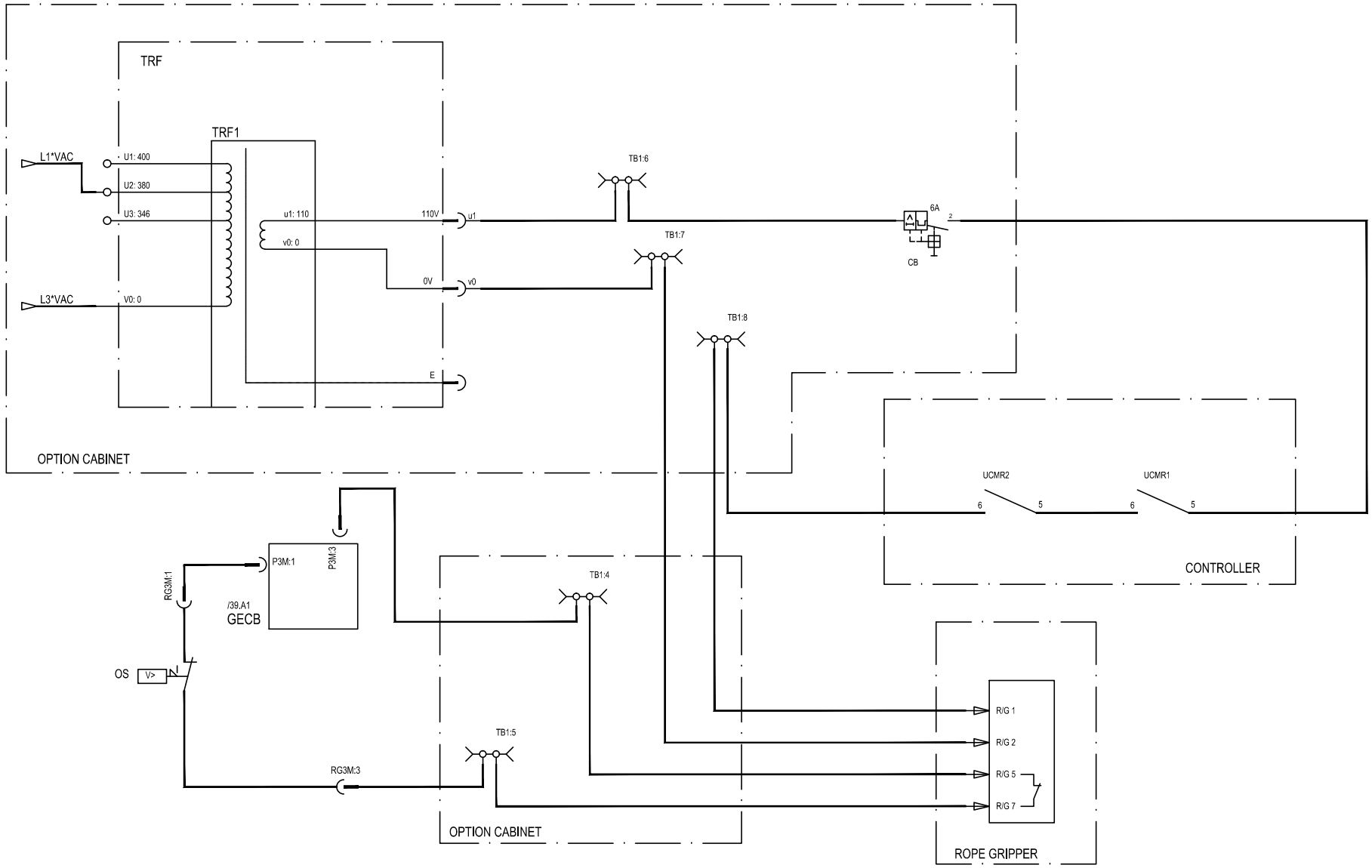

CHANGES

WARNING
THIS WORK AND THE INFORMATION IT CONTAINS ARE THE PROPERTY OF OTIS ELEVATOR COMPANY ("OTIS"), IT IS BELIEVED TO OTHERS ON THE EXPRESS CONDITION THAT IT WILL BE USED ONLY FOR OR ON BEHALF OF OTIS, THAT NEITHER IT NOR THE INFORMATION IT CONTAINS WILL BE REPRODUCED OR DISCLOSED, IN WHOLE OR IN PART, WITHOUT THE PRIOR WRITTEN CONSENT OF OTIS, AND THAT ON DEMAND IT AND ANY COPIES WILL BE PROMPTLY RETURNED TO OTIS.
UNPUBLISHED WORK. © ELEVATOR COMPANY
ALL RIGHTS RESERVED.

Otis
A United Technologies Company

Wiring Diagram
ACD4-MR

MATERIAL:
SPEC:
FINISH:

DWG	KAA21311AAF
	OTIS ENGINEERING CENTER SHANGHAI
DRAWN	JS YUN
CHK	DH PARK/DH RYU
APPD	JS LIM
AUTH	CN366761
ORIGINAL DATE	2014-04-08
SHEETS	150
SHEET	132

ALL DIMENSIONS METRIC

DRAFTED IN ACCORDANCE WITH OTIS DOCUMENT 52847

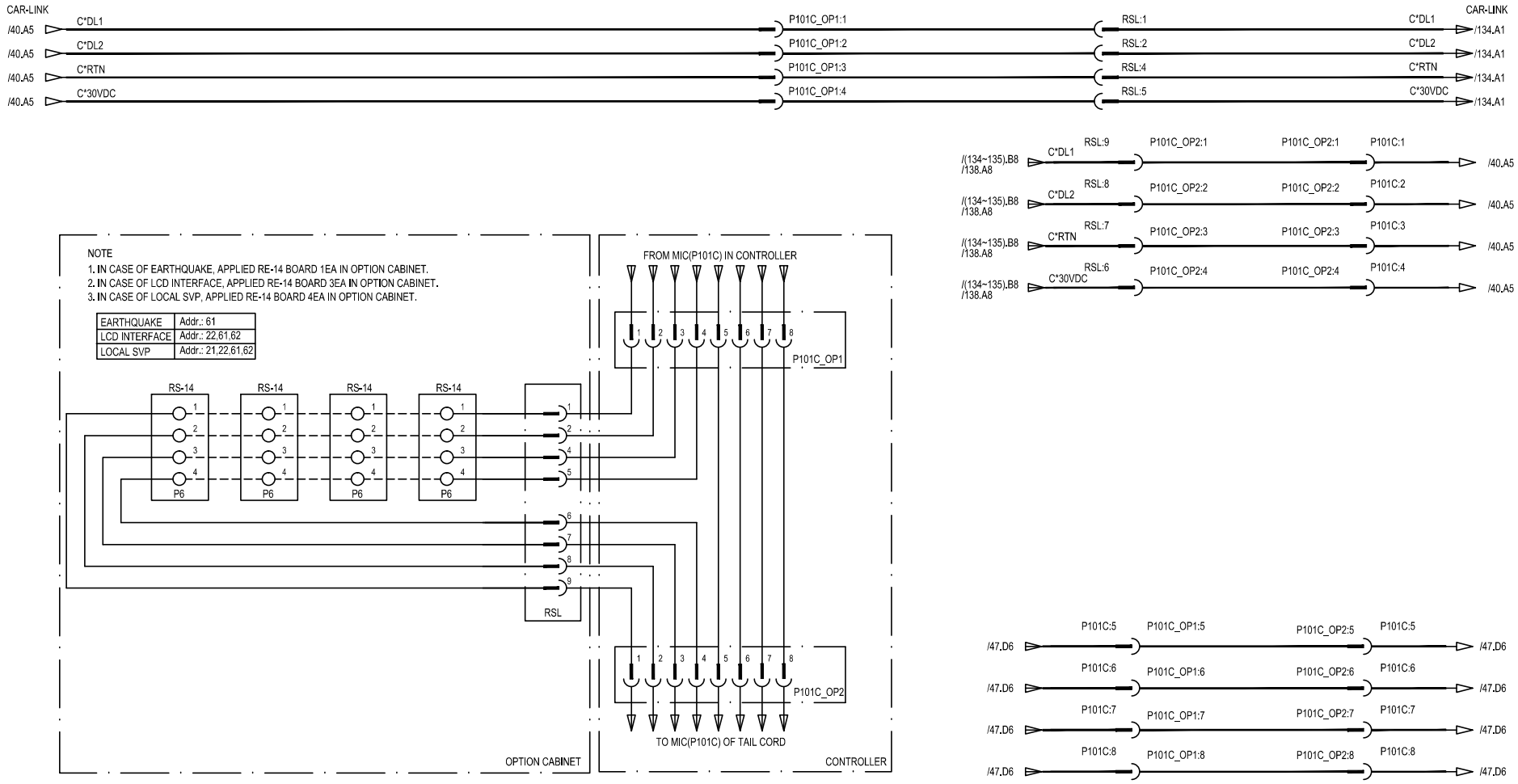

CHANGES

WARNING
THIS WORK AND THE INFORMATION IT CONTAINS ARE THE PROPERTY OF OTIS ELEVATOR COMPANY ("OTIS") IT IS DELIVERED TO OTHERS ON THE EXPRESS CONDITION THAT IT WILL BE USED ONLY FOR, OR ON BEHALF OF OTIS, THAT NEITHER IT NOR THE INFORMATION IT CONTAINS WILL BE REPRODUCED OR DISCLOSED, IN WHOLE OR IN PART, WITHOUT THE PRIOR WRITTEN CONSENT OF OTIS, AND THAT ON DEMAND IT AND ANY COPIES WILL BE PROMPTLY RETURNED TO OTIS.
UNPUBLISHED WORK. © ELEVATOR COMPANY
ALL RIGHTS RESERVED.

Wiring Diagram
ACD4-MR

MATERIAL:
SPEC:
FINISH:

DWG KAA21311AAF
OTIS ENGINEERING CENTER
SHANGHAI

DRAWN	JS YUN	ORIGINAL DATE
CHK	DH PARK/DH RYU	2014-04-08
APPD	JS LIM	
AUTH	CN366761	150 SHEETS
		SHEET 133

ALL DIMENSIONS METRIC

DRAFTED IN ACCORDANCE WITH OTIS DOCUMENT 52847

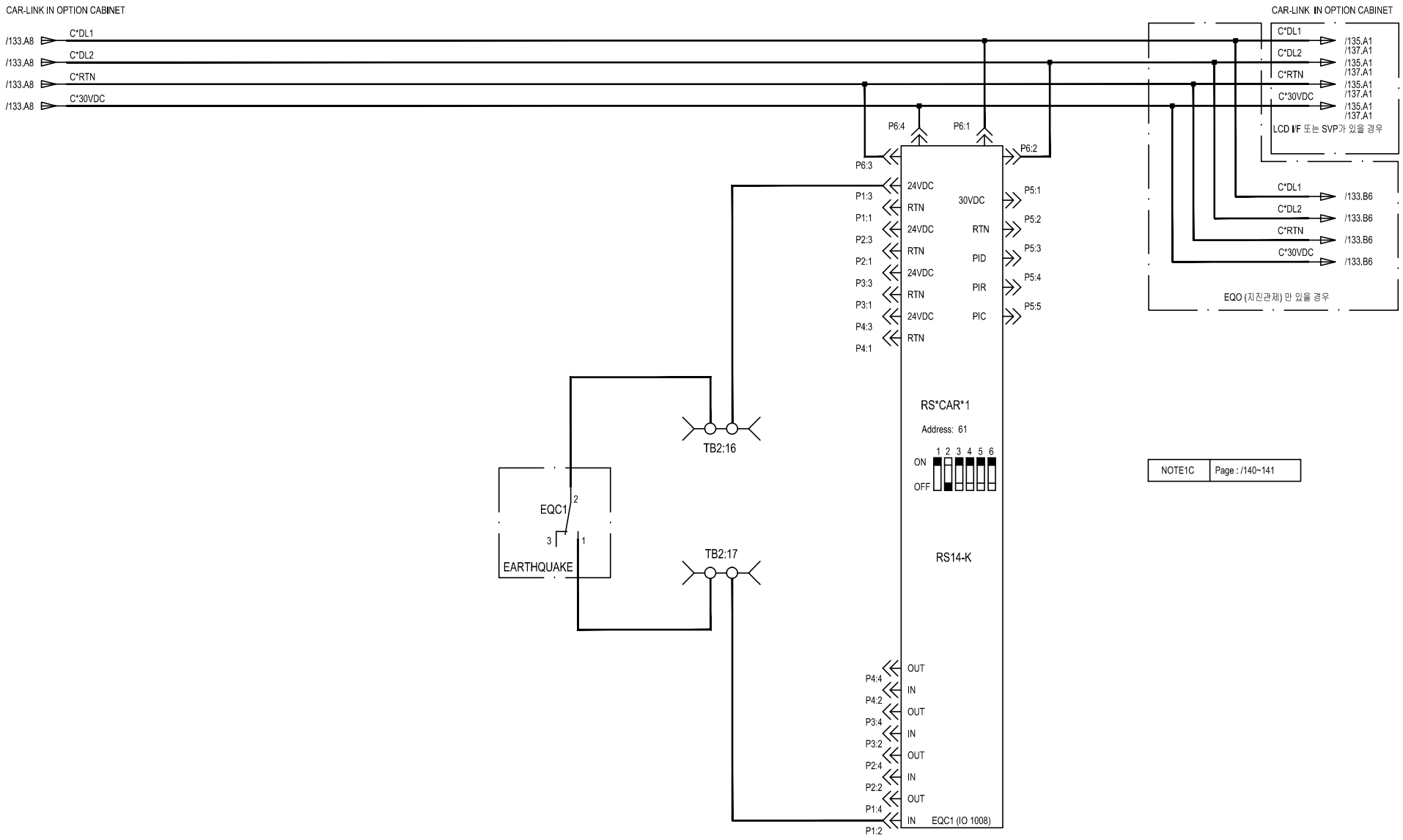

CHANGES

WARNING
THIS WORK AND THE INFORMATION IT CONTAINS ARE THE PROPERTY OF OTIS ELEVATOR COMPANY ("OTIS") IT IS DELIVERED TO OTHERS ON THE EXPRESS CONDITION THAT IT WILL BE USED ONLY FOR, OR ON BEHALF OF, OTIS THAT NEITHER IT NOR THE INFORMATION IT CONTAINS WILL BE REPRODUCED OR DISCLOSED, IN WHOLE OR IN PART, WITHOUT THE PRIOR WRITTEN CONSENT OF OTIS, AND THAT ON DEMAND IT AND ANY COPIES WILL BE PROMPTLY RETURNED TO OTIS.
UNPUBLISHED WORK. © ELEVATOR COMPANY
ALL RIGHTS RESERVED.

Otis
A United Technologies Company

Wiring Diagram
ACD4-MR

MATERIAL:
SPEC:
FINISH:

DWG	KAA21311AAF
	OTIS ENGINEERING CENTER SHANGHAI
DRAWN	JS YUN
CHK	DH PARK/DH RYU
APPD	JS LIM
AUTH	CN366761
ORIGINAL DATE	2014-04-08
SHEETS	150
SHEET	134

ALL DIMENSIONS METRIC

DRAFTED IN ACCORDANCE WITH OTIS DOCUMENT 52847

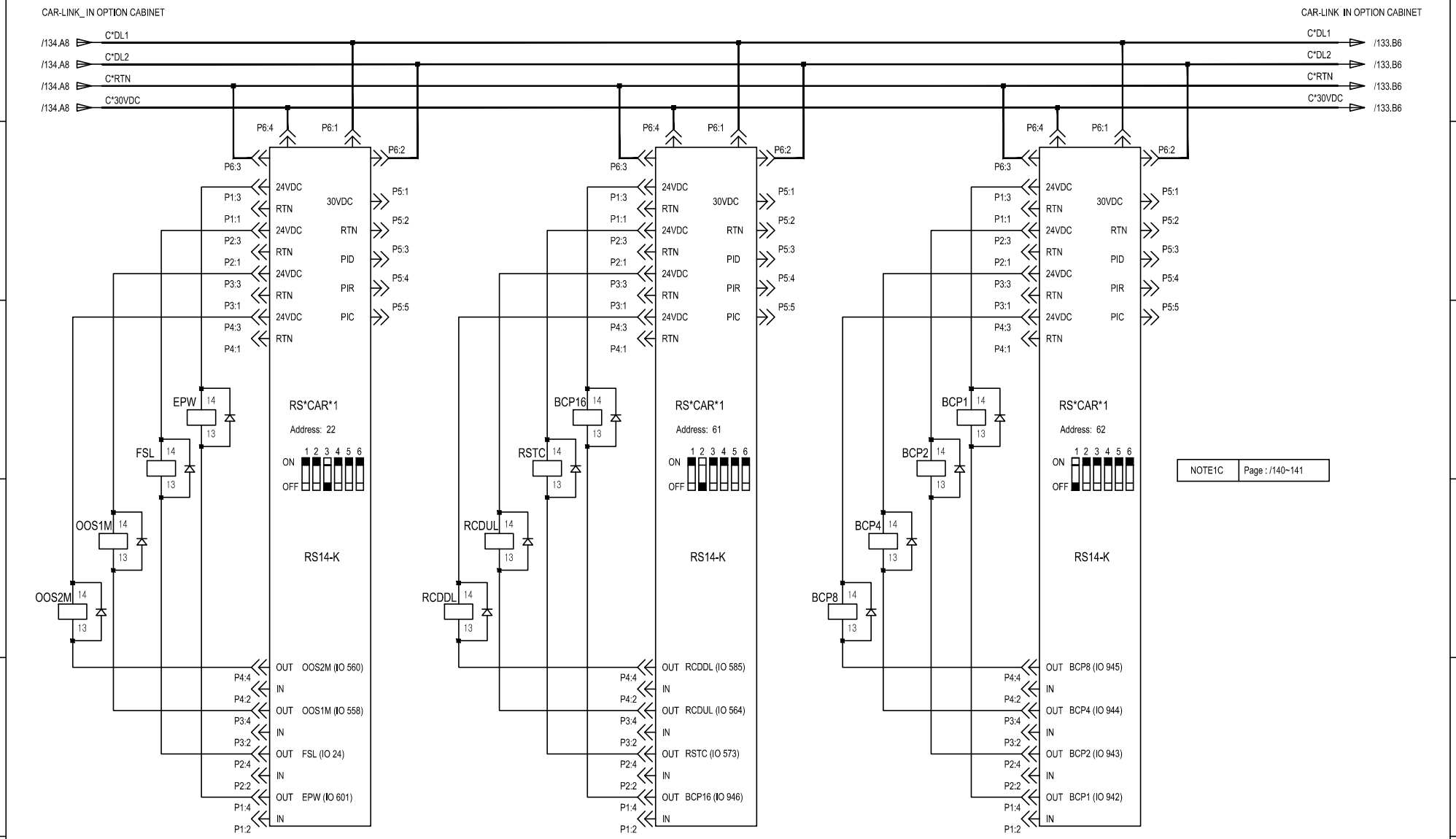

CHANGES

WARNING

THIS WORK AND THE INFORMATION IT CONTAINS ARE THE PROPERTY OF OTIS ELEVATOR COMPANY ("OTIS"), TO BE GUARDED TO OTHERS ON THE EXPRESS CONDITION THAT IT WILL BE USED ONLY FOR, OR ON BEHALF OF, OTIS; THAT NEITHER IT NOR THE INFORMATION IT CONTAINS WILL BE REPRODUCED OR DISCLOSED, IN WHOLE OR IN PART, WITHOUT THE PRIOR WRITTEN CONSENT OF OTIS; AND THAT ON DEMAND IT AND ANY COPIES WILL BE PROMPTLY RETURNED TO OTIS.

UNPUBLISHED WORK. © ELEVATOR COMPANY
ALL RIGHTS RESERVED.

Otis
A United Technologies Company

Wiring Diagram
ACD4-MR

MATERIAL:

SPEC:

FINISH:

DWG KAA21311AAF

OTIS ENGINEERING CENTER
SHANGHAI

DRAWN	JS YUN	ORIGINAL DATE
CHK	DH PARK/DH RYU	2014-04-08
APPD	JS LIM	
AUTH	CN366761	150 SHEETS
		SHEET 135

ALL DIMENSIONS METRIC

DRAFTED IN ACCORDANCE WITH OTIS DOCUMENT 52847

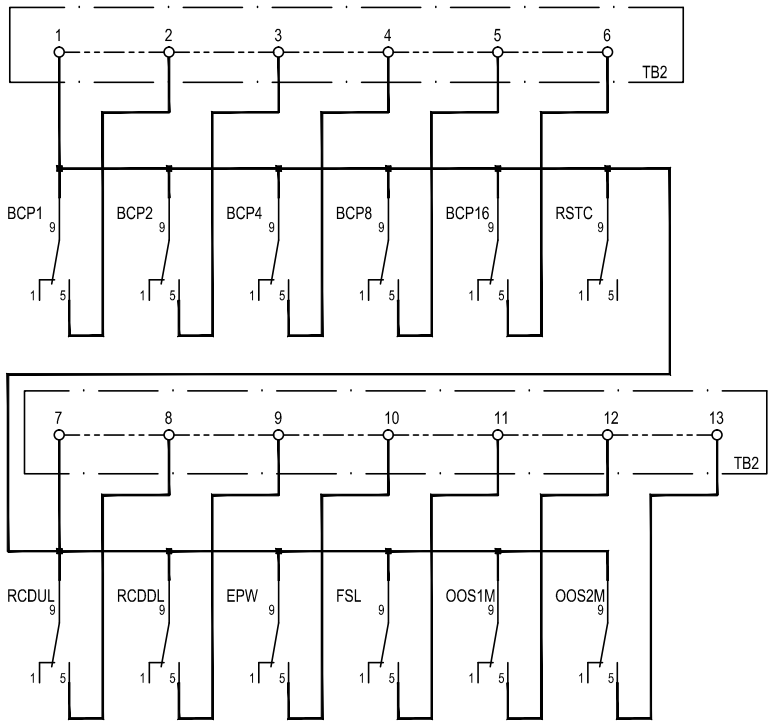

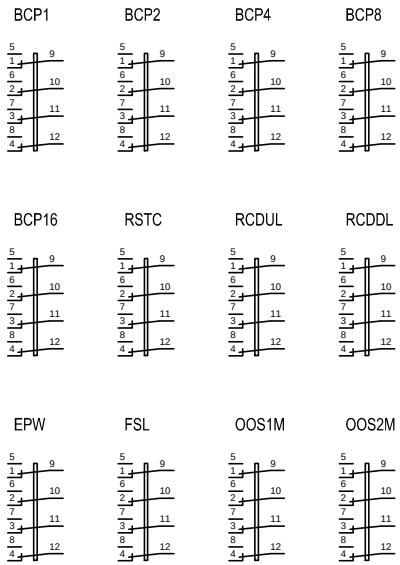

CHANGES	WARNING	Wiring Diagram ACD4-MR	DWG KAA21311AAF
	THIS WORK AND THE INFORMATION IT CONTAINS ARE THE PROPERTY OF OTIS ELEVATOR COMPANY ("OTIS") AND TO BE DELIVERED TO OTHERS ON THE EXPRESS CONDITION THAT IT WILL BE USED ONLY FOR OR ON BEHALF OF OTIS, THAT NEITHER IT NOR THE INFORMATION IT CONTAINS WILL BE REPRODUCED OR DISCLOSED, IN WHOLE OR IN PART, WITHOUT THE PRIOR WRITTEN CONSENT OF OTIS, AND THAT ON DEMAND IT AND ANY COPIES WILL BE PROMPTLY RETURNED TO OTIS.	MATERIAL:	OTIS ENGINEERING CENTER SHANGHAI
	UNPUBLISHED WORK. © ELEVATOR COMPANY ALL RIGHTS RESERVED.	DRAWN JS YUN / CHK DH PARK/DH RYU / APPD JS LIM / AUTH CN366761	ORIGINAL DATE 2014-04-08
	Otis A United Technologies Company	SPEC: / FINISH:	150 SHEETS / SHEET 136

ALL DIMENSIONS METRIC

DRAFTED IN ACCORDANCE WITH OTIS DOCUMENT 52847

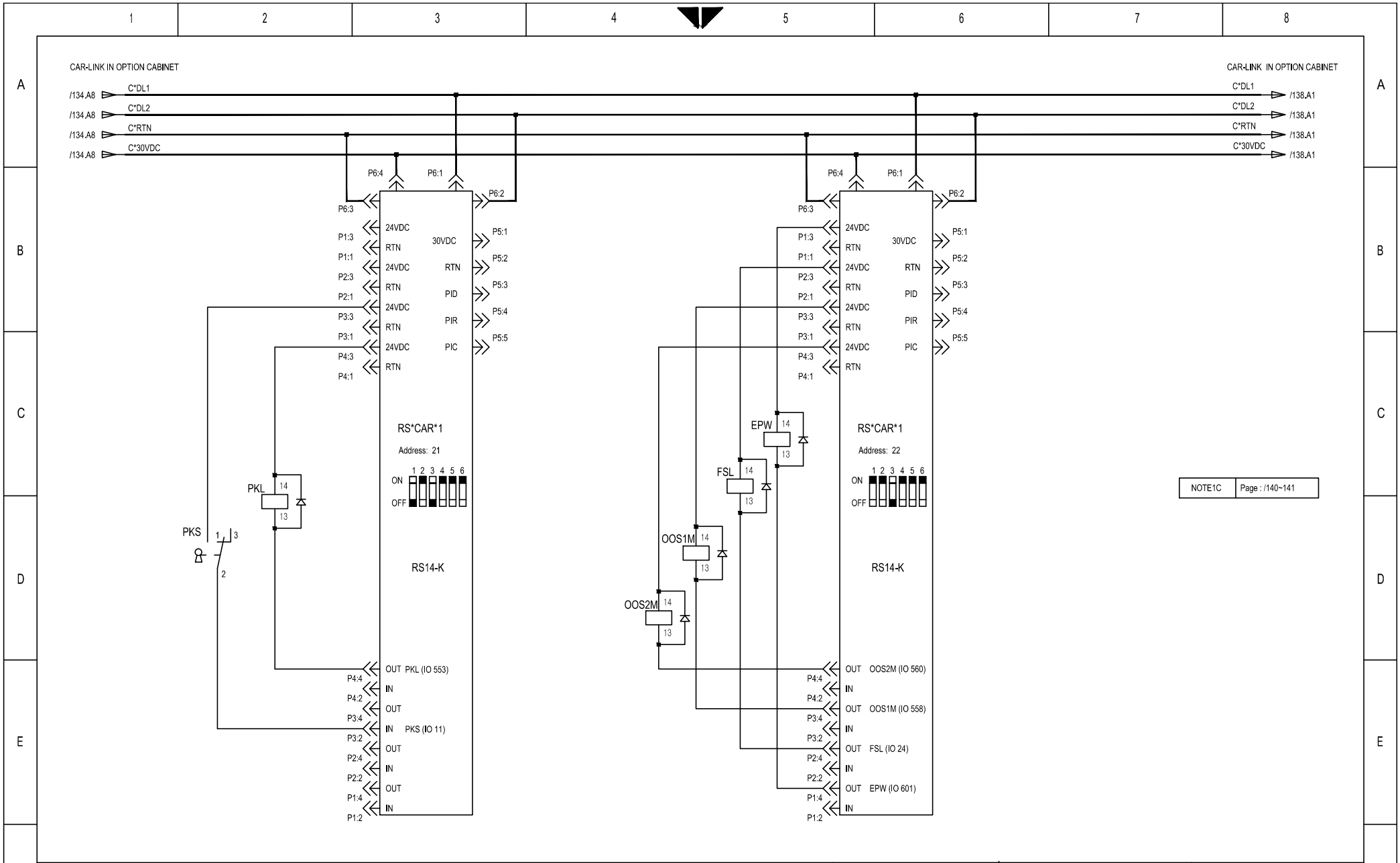

CHANGES

WARNING

THIS WORK AND THE INFORMATION IT CONTAINS ARE THE PROPERTY OF OTIS ELEVATOR COMPANY ("OTIS"), IT IS DELIVERED TO OTHERS ON THE EXPRESS CONDITION THAT IT WILL BE USED ONLY FOR OR ON BEHALF OF OTIS, THAT NEITHER IT NOR THE INFORMATION IT CONTAINS WILL BE REPRODUCED OR DISCLOSED, IN WHOLE OR IN PART, WITHOUT THE PRIOR WRITTEN CONSENT OF OTIS, AND THAT ON DEMAND IT AND ANY COPIES WILL BE PROMPTLY RETURNED TO OTIS.

UNPUBLISHED WORK. © ELEVATOR COMPANY
ALL RIGHTS RESERVED.

A United Technologies Company

Wiring Diagram
ACD4-MR

MATERIAL:

SPEC:

FINISH:

DWG KAA21311AAF

OTIS ENGINEERING CENTER
SHANGHAI

DRAWN	JS YUN	ORIGINAL DATE
CHK	DH PARK/DH RYU	2014-04-08
APPD	JS LIM	
AUTH		150 SHEETS
		SHEET 137

ALL DIMENSIONS METRIC

DRAFTED IN ACCORDANCE WITH OTIS DOCUMENT 52847

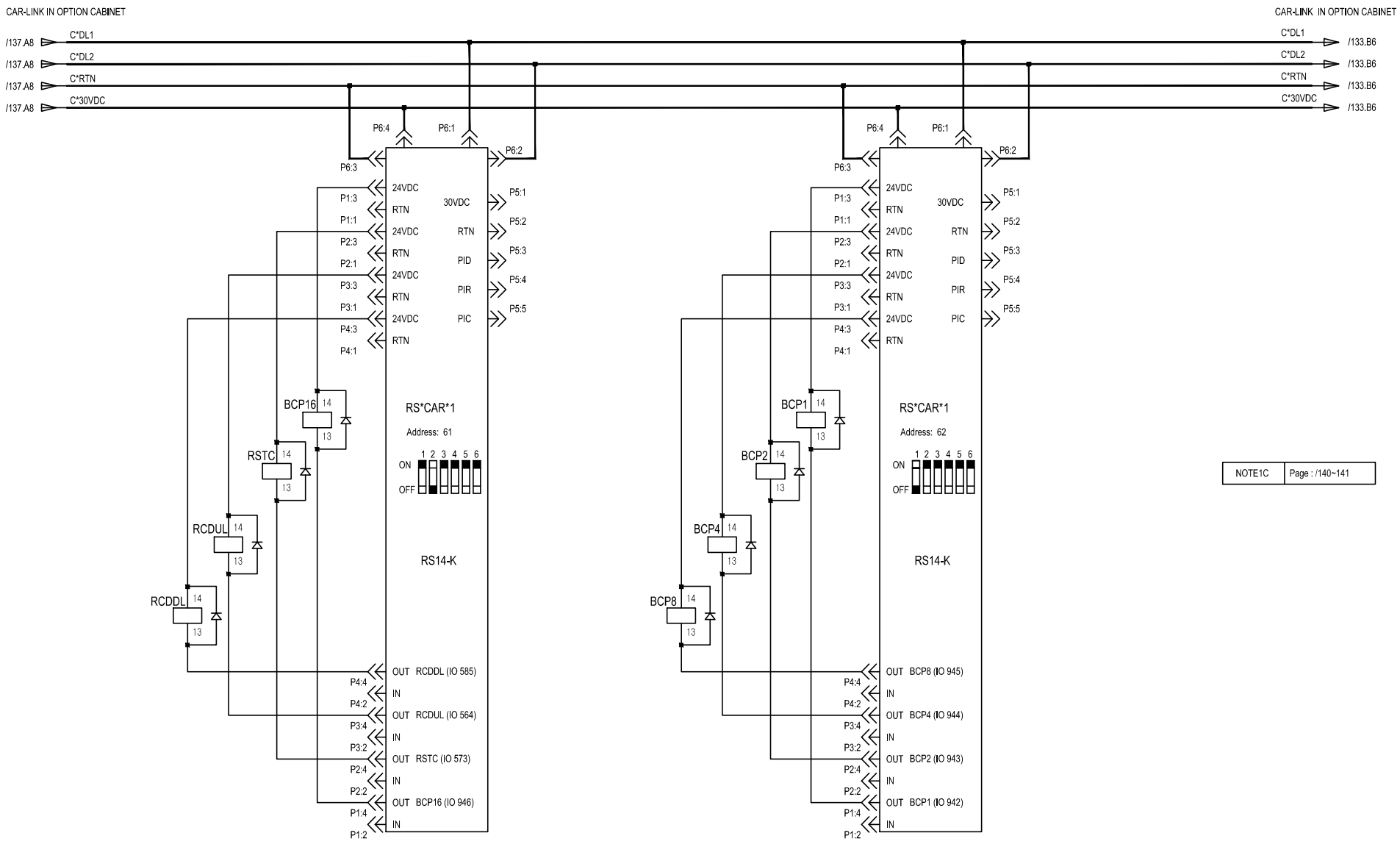

CHANGES

WARNING
THIS WORK AND THE INFORMATION IT CONTAINS ARE THE PROPERTY OF OTIS ELEVATOR COMPANY ("OTIS"), IT IS DELIVERED TO OTHERS ON THE EXPRESS CONDITION THAT IT WILL BE USED ONLY FOR OR ON BEHALF OF OTIS, THAT NEITHER IT NOR THE INFORMATION IT CONTAINS WILL BE REPRODUCED OR DISCLOSED, IN WHOLE OR IN PART, WITHOUT THE PRIOR WRITTEN CONSENT OF OTIS, AND THAT ON DEMAND IT AND ANY COPIES WILL BE PROMPTLY RETURNED TO OTIS.
UNPUBLISHED WORK. © ELEVATOR COMPANY
ALL RIGHTS RESERVED.

Otis
A United Technologies Company

Wiring Diagram
ACD4-MR

MATERIAL:
SPEC:
FINISH:

DWG KAA21311AAF
OTIS ENGINEERING CENTER
SHANGHAI

DRAWN	JS YUN	ORIGINAL DATE
CHK	DH PARK/DH RYU	2014-04-08
APPD	JS LIM	
AUTH		150 SHEETS
		SHEET 136

ALL DIMENSIONS METRIC

DRAFTED IN ACCORDANCE WITH OTIS DOCUMENT 52847

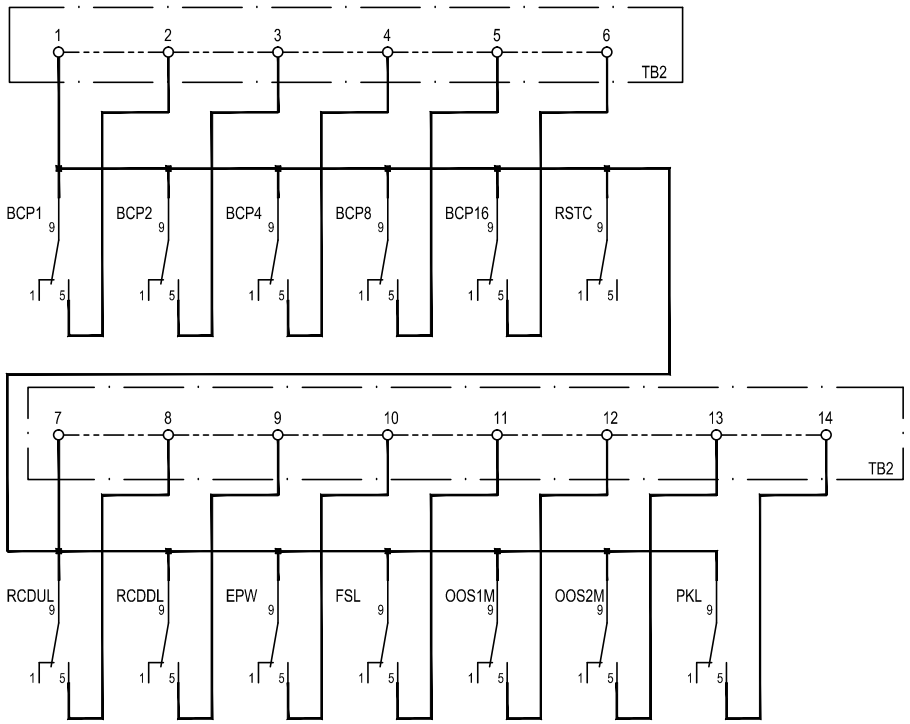

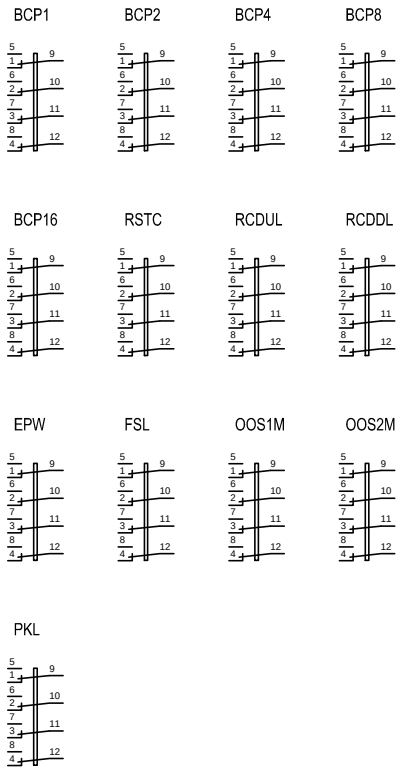

CHANGES	WARNING	Wiring Diagram ACD4-MR	DWG KAA21311AAF
	THIS WORK AND THE INFORMATION IT CONTAINS ARE THE PROPERTY OF OTIS ELEVATOR COMPANY ("OTIS"), IT IS BELIEVED TO OTHERS ON THE EXPRESS CONDITION THAT IT WILL BE USED ONLY FOR OR ON BEHALF OF OTIS, THAT NEITHER IT NOR THE INFORMATION IT CONTAINS WILL BE REPRODUCED OR DISCLOSED, IN WHOLE OR IN PART, WITHOUT THE PRIOR WRITTEN CONSENT OF OTIS, AND THAT ON DEMAND IT AND ANY COPIES WILL BE PROMPTLY RETURNED TO OTIS.	MATERIAL:	OTIS ENGINEERING CENTER SHANGHAI
	UNPUBLISHED WORK. ©2014 ELEVATOR COMPANY ALL RIGHTS RESERVED.		DRAWN JS YUN / CHK DH PARK/DH RYU / APPD JS LIM / AUTH — ORIGINAL DATE 2014-04-08
	Otis A United Technologies Company	SPEC: / FINISH:	150 SHEETS / SHEET 139

ALL DIMENSIONS METRIC

DRAFTED IN ACCORDANCE WITH OTIS DOCUMENT 52847

IO List for Local SVP and LCD Interface.

Standard I/O List — NOTE1
Software Version:

INPUT — Location : Car — Remarks : DCL/FCL

Symbol	Description	Addr.	KAA25005AAA1 Pin	I/O		
EQC1	Earth Quake Contact 1	61:1	P1:2	1008		
EQC2	Earth Quake Contact 2	61:2	P2:2	1009		

IO List for HPNRT SVP Interface and EQO-4

Standard I/O List — NOTE1
Software Version:

INPUT — Location : **Car** — Remarks : DCL/FCL

Symbol	Description	Addr.	KAA25005AAA1 Pin	I/O		
EQC1	Earth Quake Contact 1	61:1	P1:2	1008		
EQC2	Earth Quake Contact 2	61:2	P2:2	1009		

Please fill in

Standard I/O List — NOTE1
Software Version:

OUTPUT — Location : **Car** — Remarks : DCL/FCL

Symbol	Description	Addr.	KAA25005AAA1 Pin	I/O		
EFR	Emergency Pow er Rescue	61:1	P1:4	556		
EPW	Emergency Pow er Wait	61:2	P2:4	601		
OOS	Out of Service for REM	61:3	P3:4	713		
EFSL	Emergency Fire Service Light	61:4	P4:4	999		

Please fill in

Standard I/O List — NOTE1
Software Version:

INPUT — Location : **Hall** — Remarks : DCL/FCL

Symbol	Description	Addr.	KAA25005AAA1 Pin	I/O		
PKS	Parking Switch	21:3	P3:2	11		

Please fill in

Standard I/O List — NOTE1
Software Version:

OUTPUT — Location : **Hall** — Remarks : DCL/FCL

Symbol	Description	Addr.	KAA25005AAA1 Pin	I/O		
PKL	Parking Light	21:3	P3:4	553		

Please fill in

CHANGES

WARNING
THIS WORK AND THE INFORMATION IT CONTAINS ARE THE PROPERTY OF OTIS ELEVATOR COMPANY ("OTIS"), IT IS BEING LENT TO OTHERS ON THE EXPRESS CONDITION THAT IT WILL BE USED ONLY FOR OR ON BEHALF OF OTIS, THAT NEITHER IT NOR THE INFORMATION IT CONTAINS WILL BE REPRODUCED OR DISCLOSED, IN WHOLE OR IN PART, WITHOUT THE PRIOR WRITTEN CONSENT OF OTIS, AND THAT ON DEMAND IT AND ANY COPIES WILL BE PROMPTLY RETURNED TO OTIS.
UNPUBLISHED WORK. © ELEVATOR COMPANY
ALL RIGHTS RESERVED.

Otis
A United Technologies Company

Wiring Diagram
ACD4-MR

MATERIAL:
SPEC:
FINISH:

DWG KAA21311AAF
OTIS ENGINEERING CENTER
SHANGHAI

DRAWN	JS YUN	ORIGINAL DATE 2014-04-08
CHK	DH PARK/DH RYU	
APPD	JS LIM	
AUTH	CN366761	150 SHEETS
		SHEET 141

ALL DIMENSIONS METRIC

DRAFTED IN ACCORDANCE WITH OTIS DOCUMENT 52847

J*BOX-BOARD: DCC-133

101C		
NO	DES.	LOC.
1		
2		
3	TERM2-02 IP-09	/42.A7
4	LS-03 J1-09	/42.A7
5	IP-02	/47.C4
6	IP-03	/47.C5
7	LS-04	/45.D3
8	LS-05	/45.D3
9		
10		
11	IP-04	/47.C6
12	IP-05	/47.C8
13	TERM1-03	
14	J1-03	/100.C7
15	IP-06	
16	IP-08	/100.C7
17	COP1-19	/100.D7
18	COP1-20	/100.D7
19	COP1-12	/100.E8
20	COP1-13	/100.F8

102C		
NO	DES.	LOC.
1	EES-01	/17.E1
2	LS-02	/17.C4
3	INS102	/17.B5
4	CDS-01	/19.E7
5	CDS-02	/19.E3
6	INS1-04	/21.B4
7		
8	INS1-12	/21.D3
9		
10	LS-07	/21.D2
11		
12	INS1-15	/17.E3
13	INS1-03	/19.D7
14		
15		
16		
17		
18		
19		
20		
21		

LS		
NO	DES.	LOC.
1	SCS-02	/17.C4
2	INS1-01 102C-02	/17.B4
3	101C-04 IP-01	/45.C3
4	101C-07	/45.C3
5	101C-08	/45.C3
6	INS1-05	/21.D2
7	102C-10	/21.D2
8		
9		

RS1		
NO	DES.	LOC.
1	REVR-02 REVR-04	/84.B6
2	PJ1-01	/84.E6
3	REVR-06	/84.E6
4	PJ1-10	/84.E6
5	PJ1-13	/84.E6
6	PJ1-02	/84.E6
7		
8	PJ1-02 SES(R)-02	/84.B6

PLG		
NO	DES.	LOC.
1	COP1-08	/100.A5
2		
3	J1-02	/100.A6
4		
5		
6		
7		
8		
9		

RS2		
NO	DES.	LOC.
1	INS1-09	/84.D5
2		
3	INS1-10	
4		
5	J1-05	/84.D5
6	EFS2-01	/84.D5
7	J1-06	/84.D5
8	EFS2-02 J1-07	/84.B5

EES		
NO	DES.	LOC.
1	102C-01	/17.E2
2	COP2-08	/17.E2
3		
4		
5		
6		
7		

INS1		
NO	DES.	LOC.
1	LS-02	/17.D3
2	102C-03	/17.A5
3	102C-13	/21.A1
4	102C-06	/21.B4
5	LS-06	/21.D2
6		
7		
8		
9	RS2-01	/84.D4
10	RS2-03	
11	IP-01 J1-09	/17.A5
12	102C-08	
13	E.STOP-05	/17.A3
14	SCS-01	/17.A4
15	102C-12	/17.E3
16	102C-11	/21.D3
17		
18		
19	IP-09 J1-08	/17.B5
20	PJ1-07 EFS2-02	/84.C4
21		

SCS		
NO	DES.	LOC.
1	INS1-14	/17.A4
2	LS-01	/17.B4
3		
4		
5		
6		
7		

CDS		
NO	DES.	LOC.
1	102C-04	/19.E6
2	102C-05	/19.E3
3		
4		
5		

PSES		
NO	DES.	LOC.
1		
2		
3	REVR-01 EFS2-04	/84.C3
4	PSES-05	
5	PSES-04	
6	EFS2-03 SES(L)-01	/84.C3
7		
8		
9		

REVR		
NO	DES.	LOC.
1	PSES3-03 EFS2-04	/84.D3
2	RS1-01	/84.D3
3	PJ1-04	/84.D3
4	RS1-01	/84.D3
5	PJ1-05 JMP1-01	/84.E5
6	RS1-03	/84.E6

PJ1		
NO	DES.	LOC.
1	RS1-02	/84.E2
2	RS1-06	/84.E2
3		
4	REVR-03	/84.B2
5	RS1-08 REVR-05	/84.E2
6	TERM2-09	/81.B5
7	J1-07 INS1-02	/84.B2
8		/81.B5
9		
10	RS1-04	/84.E2
11		
12		
13	RS1-05	/84.E2
14		
15	SES(L)-02	/84.C2
16		
17		/81.B4
18		
19		
20		
21		

EFS2		
NO	DES.	LOC.
1	RS2-06	/84.C4
2	INS1-20 RS2-08	/84.C4
3	SES(L)-01 PSES-06	/84.C3
4	PSES-03 REVR-01	/84.C3

W/ EFS-K

VOL		
NO	DES.	LOC.
1	COP1-4	/100.B7
2	COP1-5	/100.A7
3		
4		

COP1		
NO	DES.	LOC.
1	J1-09 TERM1-01	/89.A2
2	J1-08 TERM1-02	/89.A2
3		
4	VOL-01	/100.B7
5	VOL-02	/100.A7
6	TERM1-04	/100.B7
7	TERM1-05	/100.B7
8	PLG-01	/100.A5
9	J1-01	/100.B5
10	J1-03 D2-01	/100.D5
11	J1-04	/100.D6
12	101C-19	/100.E7
13	101C-20	/100.E7
14		
15		
16		
17		
18	ALB-04	/65.D7
19	101C-17	/100.D6
20	101C-18	/100.D6

COP2		
NO	DES.	LOC.
1		
2		
3		
4		
5		
6		
7		
8	EES-02	/17.D2
9	E.STOP-01	/17.C2

TERM1		
NO	DES.	LOC.
1	COP1-01 101C-04	/52.A4
2	COP1-02	/52.A5
3	101C-13	
4	COP1-06	/100.A8
5	COP1-07	/100.A8

TERM2		
NO	DES.	LOC.
1	TERM2-02	/100.A2
2	TERM2-03	/100.C3
3	TERM2-01	/100.A3
4	R1-01	/100.C4
5	CR-01	/100.C3
6	CR-02	/100.D3
7	TERM2-08 C1-02	/100.E4
8	TERM2-07	/100.E3
9	PJ1-06 TERM2-10	/100.E4
10	TERM2-09	/100.F4

TERM3		
NO	DES.	LOC.
1	TERM3-02	/81.A2
2	TERM3-03	-
3	TERM3-04	
4	TERM3-01	/81.B2,B3
5	TERM3-06	/81.B2
6	TERM3-07	-
7	TERM3-08	-
8	TERM3-05	/81.A2,B3
9	TERM3-10 TERM2-10	/81.A5
10	TERM3-09	/100.E4

SES(L)		
NO	DES.	LOC.
1	EFS2-03 PSES-06	/84.C2
2	PJ1-15 SES(R)-01	/84.C2
3		
4		
5		

SES(R)		
NO	DES.	LOC.
1	SES(L)-02 JMP2-01	/84.D2
2	JMP2-02 RS1-08	/84.D2
3		
4		
5		

IP		
NO	DES.	LOC.
1	D1-02 D2-02	/47.A5
2	101C-05	/47.C4
3	101C-06	/47.C5
4	101C-11	/47.C6
5	101C-12	/47.C8
6	101C-15	
7	J1-03	
8	J1-04 101C-16	
9	101C-03 INS1-19	/47.A5
10		

J1		
NO	DES.	LOC.
1	COP1-09	/100.B5
2	PLG-03	/100.B6
3	IP-07 101C-14 ALB-01 COP1-10	/100.C5
4	IP-08 ALB-03 COP1-11	/100.C6
5	RS2-05	/84.C5
6	RS-07	/84.C5
7	RS-08 PJ1-07	/84.C5
8	INS1-19 COP1-02	/84.A2
9	INS1-11 COP1-01	/84.A2
10		

ALB		
NO	DES.	LOC.
1	J1-03 D3-02	/65.D7
2	ALB-04 D3-01	/65.D7
3	J1-04	/65.D7
4	COP1-18 ALB-02	/65.D7

E.STOP		
NO	DES.	LOC.
1	COP2-09	/17.C2
2		
3		
4		
5	INS1-13	/17.B2

JMP1 : .
JMP2 : .

J.BOX TERMINALS

CHANGES

WARNING
THIS WORK AND THE INFORMATION IT CONTAINS ARE THE PROPERTY OF OTIS ELEVATOR COMPANY ("OTIS"), IT IS LOANED TO OTHERS ON THE EXPRESS CONDITION THAT IT WILL BE USED ONLY FOR OR ON BEHALF OF OTIS, THAT NEITHER IT NOR THE INFORMATION IT CONTAINS WILL BE REPRODUCED OR DISCLOSED, IN WHOLE OR IN PART, WITHOUT THE PRIOR WRITTEN CONSENT OF OTIS, AND THAT ON DEMAND IT AND ANY COPIES WILL BE PROMPTLY RETURNED TO OTIS.
UNPUBLISHED WORK. © ELEVATOR COMPANY
ALL RIGHTS RESERVED.

Otis
A United Technologies Company

Wiring Diagram
ACD4-MR

MATERIAL:
SPEC:
FINISH:

DWG KAA21311AAF
OTIS ENGINEERING CENTER
SHANGHAI

DRAWN JS YUN
CHK DH PARK/DH RYU
APPD JS LIM
AUTH

ORIGINAL DATE
2014-04-08

150 SHEETS
SHEET 149

ALL DIMENSIONS METRIC

DRAFTED IN ACCORDANCE WITH OTIS DOCUMENT 52847

41

PIN	LOC.
1	/49.B6
2	/49D5
3	/49.D4
4	/49.D2
5	/49.D6
6	/49.D3
7	/49.D6
8	/49.B6
9	/49.B6
10	/50.B2
11	/50.E4
12	/50.D5
13	/50.C5
14	/50.D5
15	
16	
17	
18	
19	
20	/(17~18).C4
21	/(17~18).C4
22	/(15~16).A4
23	/(15~16).B4
24	/50.C2
25	/50.C3
26	/44.A2
27	/44.A2
28	/44.A4
29	/44.A4
30	/44.B5

PJ1	
1	/49.C5
2	/49.C6
3	
4	/49.C4
5	/50.C3
6	
7	/49.B2
8	/44.B5
9	
10	/49.C6
11	
12	
13	/49.D1
14	
15	/50.C2
16	
17	/44.B5
18	
19	
20	
21	

PSESR	
1	/44.C2
2	/44.C2
3	/49.D3
4	
5	
6	/49.C3
7	
8	
9	

19	
1	/44.A2
2	/44.A2
3	/44.A5
4	
5	/(17~18).C4
6	/(17~18).C4
7	/(15~16).B4
8	/(15~16).A4
9	
10	
11	
12	
13	

RSES(L)	
1	/50.B2
2	/50.C2
3	
4	
5	

RSES(R)	
1	/50.D2
2	/50.D2
3	
4	
5	

P6	
1	/50.A7
2	/50.A7
3	
4	/49.A2
5	/49.A2
6	/49.A2
7	/49.A2
8	
9	/49.E5

REAR J.BOX TERMINALS

For Korea

CHANGES

WARNING
THIS WORK AND THE INFORMATION IT CONTAINS ARE THE PROPERTY OF OTIS ELEVATOR COMPANY ("OTIS"), IT IS DELIVERED TO OTHERS ON THE EXPRESS CONDITION THAT IT WILL BE USED ONLY FOR OR ON BEHALF OF OTIS, THAT NEITHER IT NOR THE INFORMATION IT CONTAINS WILL BE REPRODUCED OR DISCLOSED, IN WHOLE OR IN PART, WITHOUT THE PRIOR WRITTEN CONSENT OF OTIS, AND THAT ON DEMAND IT AND ANY COPIES WILL BE PROMPTLY RETURNED TO OTIS.

UNPUBLISHED WORK. © ELEVATOR COMPANY
ALL RIGHTS RESERVED.

Otis
A United Technologies Company

Wiring Diagram
ACD4-MR

MATERIAL:

SPEC:

FINISH:

DWG KAA21311AAF

OTIS ENGINEERING CENTER
SHANGHAI

DRAWN	JS YUN	ORIGINAL DATE
CHK	DH PARK/DH RYU	2014-04-08
APPD	JS LIM	
AUTH	CN366761	150 SHEETS
		SHEET 150

ALL DIMENSIONS METRIC

DRAFTED IN ACCORDANCE WITH OTIS DOCUMENT 52847